PRELIMINARY

VHV50S Series

50W HIGH VOLTAGE 4:1 SINGLE DC/DC CONVERTER

100-400 V_{IN} (PEAK 450V) 5V_{OUT} to 48V_{OUT} Output Range

Key Features

- 4:1 Input Voltage Range
- Input-to-output isolation
- Soft start
- Short circuit and thermal protection
- EMI six-sided shielding
- Frequency Jitter Modulation
- Remote On/Off

Functional Description

The VHV50S Series is a 50W single DC/DC Converter in a 2.41×2.29×0.50-inch package that offers an input range of 100V_{IN} to 400V_{IN} and an output range of 5V_{OUT} to 48 V_{OUT} with an operating temperature range from -40°C to +75°C. The switching frequency jitter modulation reduces EMI, while its six-sided shielding eliminates RFI.

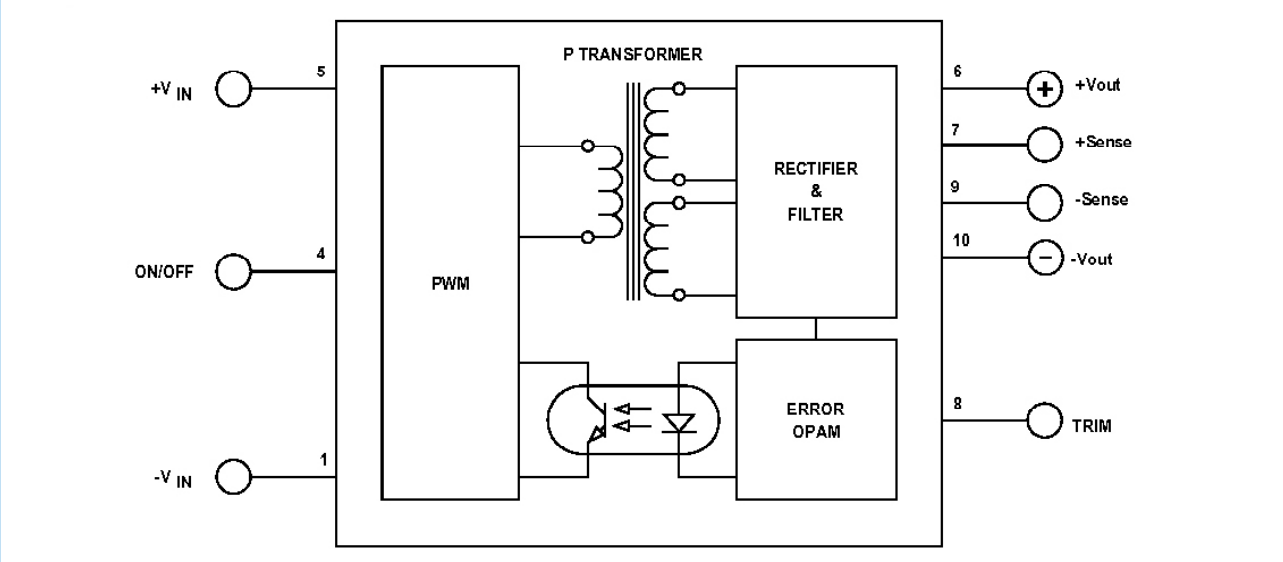

Typical Block Diagram

PRELIMINARY

Electrical Specifications

Unless otherwise specified, all parameters are given under typical +25°C with nominal input voltage and under full output load conditions.

INPUT SPECIFICATIONS

PARAMETER	CONDITION / NOTE	MIN	TYP	MAX	UNIT
Input Voltage Range	See Note 1	100	270	400	Vdc
Input Voltage Slew Rate				10	V/µS
No Load Input Current	See Model Selection Guide				mA
Full Load Input Current	See Model Selection Guide				mA
Input Filter	C				
Reflected Ripple Current	See Model Selection Guide[2]				mA_{PP}
Reverse Voltage Protection	Parallel Diode		5		A
On/Off	Reference to $-V_{IN}$				
Converter ON	Open		5.6		Vdc
Converter OFF	0V, Pin 2 (On/Off) shorted to Pin 1 ($-V_{IN}$)		0	0.8	Vdc
Turn On Delay	Including soft start		TBD		mS
Startup Input Voltage			TBD		Vdc

OUTPUT SPECIFICATIONS

PARAMETER	CONDITION / NOTE	MIN	TYP	MAX	UNIT
Output Voltage Accuracy			1	2	%
Output Current	See Model Selection Guide				A
Output Adjust Range			10		% of V_{OUT}
Ripple & Noise (20MHz BW)			1	2	% of V_{OUTPP}
Line Regulation	Outputs fully loaded		1		%
Load Regulation	10% FL to FL		1		%
Temperature Coefficient @ FL			±0.02		%/°C
Short Circuit Protection	Continuous, Current Limit				
Short Circuit Restart	Automatic				
Transient response (to within 1% of V_{OUT})	50% FL to 100% FL to 50% FL		TBD		µs

GENERAL SPECIFICATIONS

PARAMETER	CONDITION / NOTE	MIN	TYP	MAX	UNIT
Efficiency (at full power)	See Model Selection Guide				%
Isolation Voltage (1 min.)	All Models		1000		Vdc
Isolation Resistance			10^9		Ω
Isolation Capacitance			300		pF
Switching Frequency		115	130	140	kHz
Frequency Jitter			±4		kHz
Frequency Jitter Modulation			250		Hz

ENVIRONMENTAL SPECIFICATIONS

PARAMETER	CONDITION / NOTE	MIN	TYP	MAX	UNIT
Operating Temperature (Ambient)		-40		+75	°C
Storage Temperature Range		-60		+125	°C
Thermal Protection, Turn Off	Junction Temperature		145		
Thermal Hysterisis			30		°C
Humidity	Up to 95% non-condesing				°C
Cooling	Free-air convection				
MTBF	per MIL-HNBK-217F (Ground benign, +25 °C)		TBD		hours

PRELIMINARY

PHYSICAL CHARACTERISTICS

PARAMETER	CONDITION / NOTE	MIN	TYP	MAX	UNIT
Dimensions (LxWxH)	2.410x2.290x0.500 IN. (61.21x58.17x12.7 MM)				
Weight	110g				
Case Material	Coated metal				
Shielding	Six-sided continuous				
Case Connection	Case and Header Floating				

Note 1:The converter will operate at Vin Peak of 450 VDC .
Note 2: Measured with 10µF input capacitor

Model Selection Guide

MODEL NUMBER	INPUT					OUTPUT		
	Voltage (Vdc)		**Current** (mA)		**Reflected Ripple** (mA)	**Voltage** (Vdc)	**Current** (mA)	**Efficiency Full Load** (%)
	Nominal	**Range**	**No Load**	**Full Load**				
VHV50S3.3/270	270	100-400	TBD	148	TBD	3.3	16667	80
VHV50S5/270	270	100-400	TBD	150	TBD	5	10000	81
VHV50S12/270	270	100-400	TBD	154	TBD	12	4167	83
VHV50S15/270	270	100-400	TBD	157	TBD	15	3333	85
VHV50S24/270	270	100-400	TBD	161	TBD	24	2083	87
VHV50S28/270	270	100-400	TBD	163	TBD	28	1785	88
VHV50S48/270	270	100-400	TBD	165	TBD	48	1042	89

Contact factory for custom input and output voltage combinations

ORDERING GUIDE

VHV50 S __/___ _ _

- Series
- Number of Outputs (**S** = Single)
- Output Voltage
- Input Voltage
- Insert **R** for RoHS models (*Optional*)
- Insert **X** for -55 C to +85 C models (*Optional*)

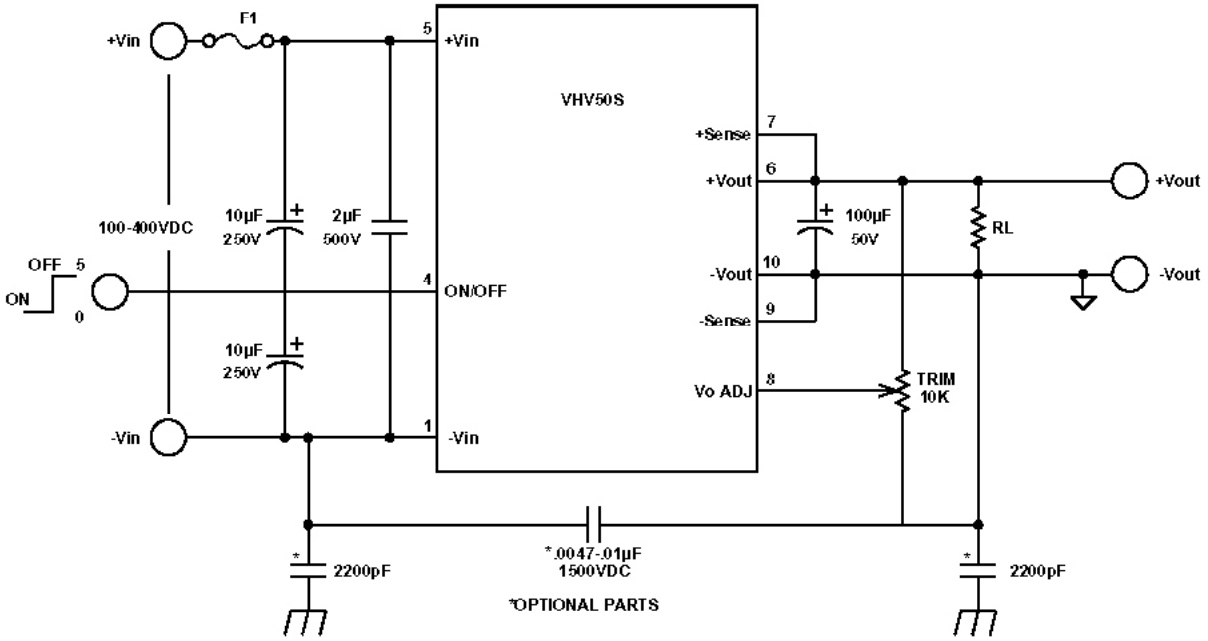

FIGURE 1. Typical connection diagram of a VHV50S Series

PRELIMINARY

MECHANICAL SPECIFICATIONS

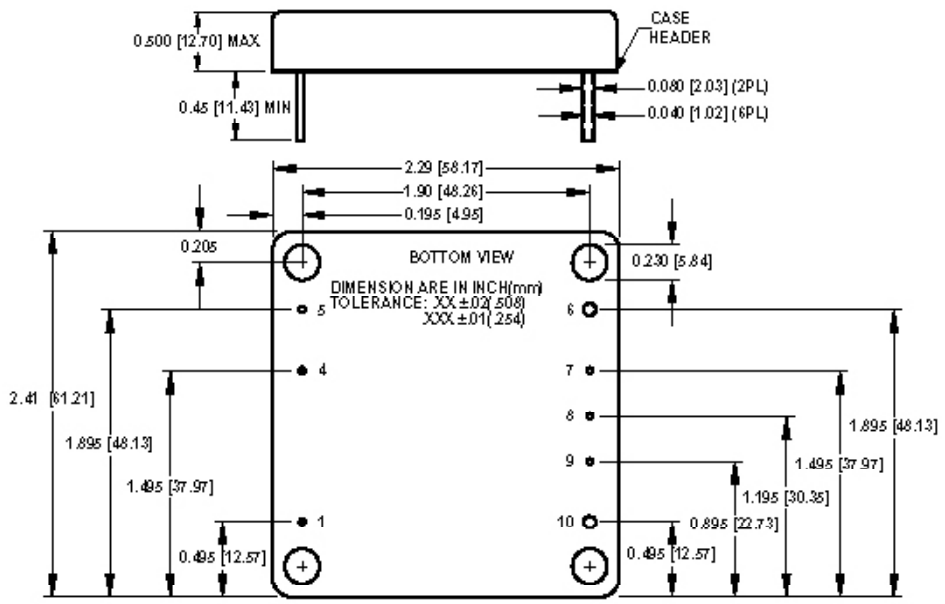

Pin	Function
1	$-V_{IN}$
2	No Pin
3	No Pin
4	ON/OFF
5	$+V_{IN}$
6	$+V_{OUT}$
7	+Sense
8	$V_{OUT\ ADJ}$
9	-Sense
10	$-V_{OUT}$

MECHANICAL SPECIFICATIONS for HEAT SINK

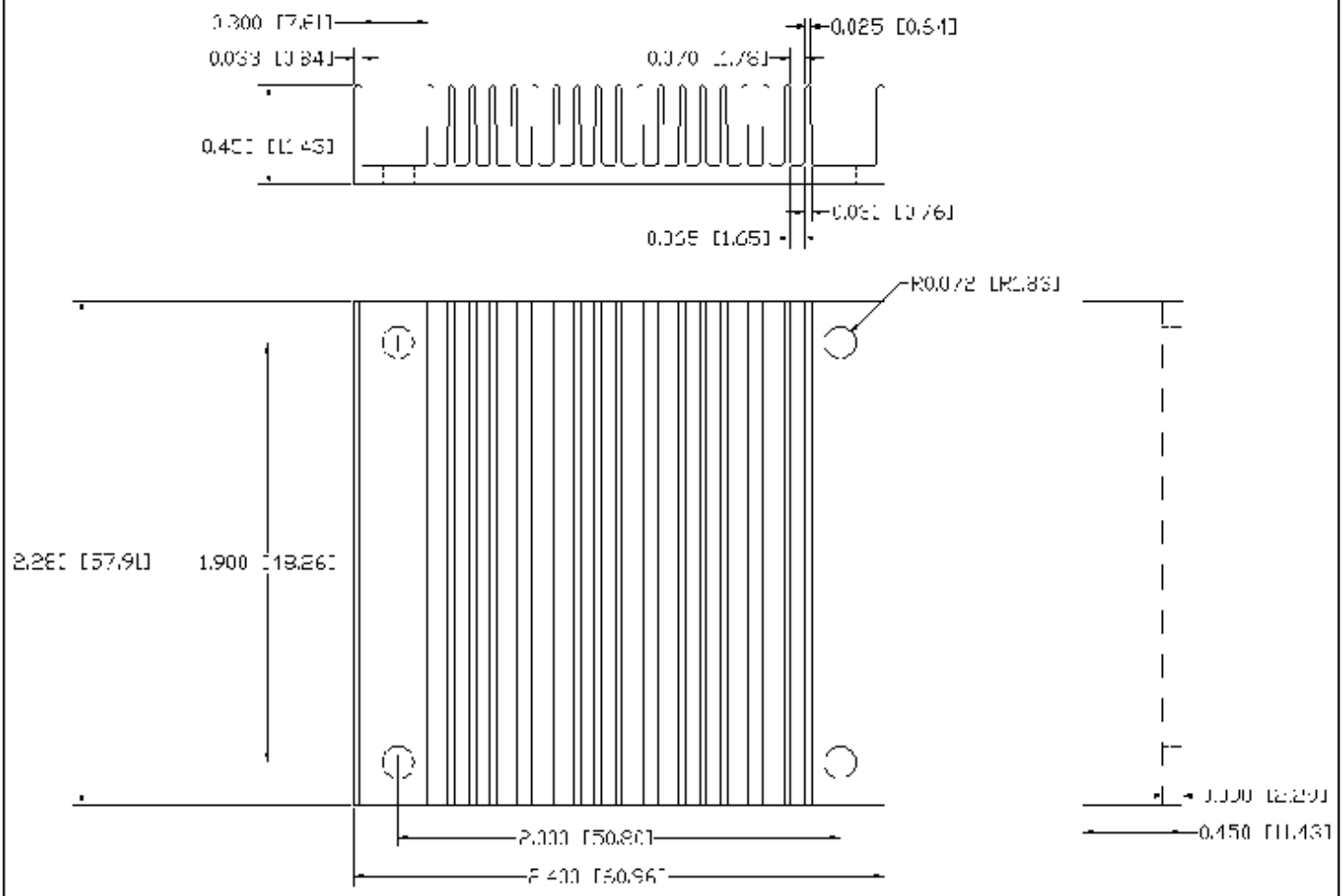

FIGURE 2. Optional Heat Sink for the VHV50 Series

EXTERNAL TRIMMING OF OUTPUT VOLTAGES

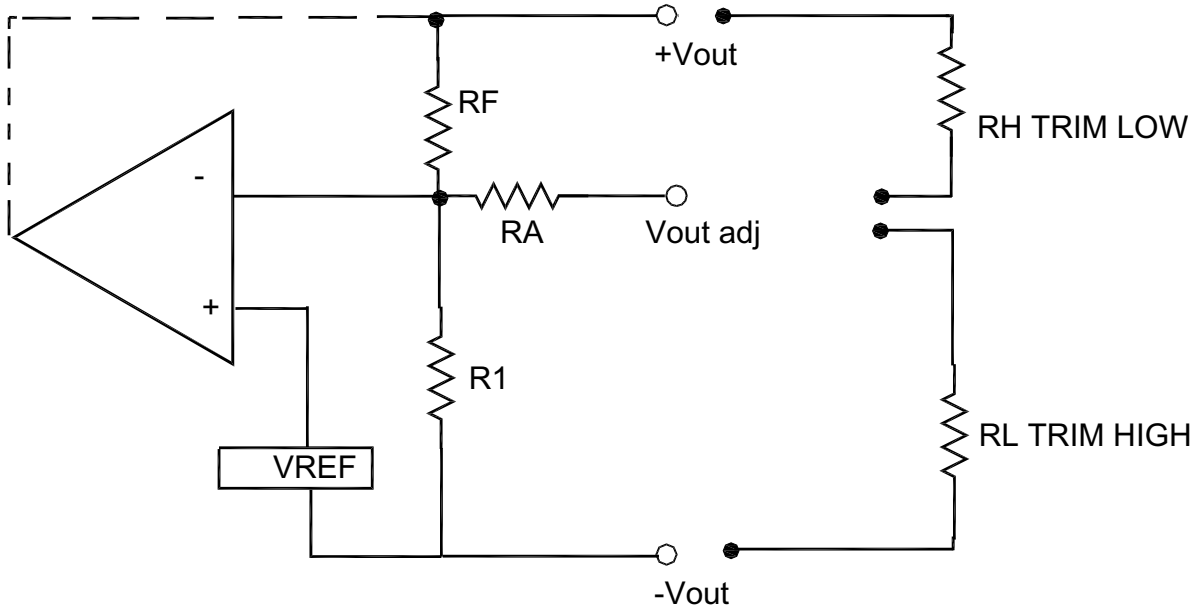

$$\text{TRIM-UP}\quad RX = \frac{R1\,(RF)}{VO\,(R1) - (R1+RF)} - RA$$

$$\text{TRIM-DN}\quad RX = \frac{RF}{\frac{RF\,(VREF)}{(VO-VREF)\,R1} - 1} - RA$$

Vout	R1	RF	RA	VREF
5	2.49K	2.49K	20K	2.50V
12	2.49K	9.53K	20K	2.50V
15	2.49K	12.59K	20K	2.50V
24	2.49K	21.57K	20K	2.50V
28	2.55K	30.10K	20K	2.50V
48	1.00K	18.20K	20K	2.50V

FIGURE 3. Output voltage trim for VHV50S Series