24 PIN DIP EMI FILTER
PFL100

36 to 210 Watts Input Filter
Meets CS01, CE101, CE102 limits

Key Features

- Wide input voltage range 9 to 100 V
- Up to 3 Amps Input/Output current
- 140 dB differential mode attenuation at 6kHz
- 60 dB minimum attenuation at 60kHz
- All capacitors are X7R stress relieved ceramic
- Six-sided shielding
- 1.01 x 10^6 MTBF @ Ground Mobile, +50C

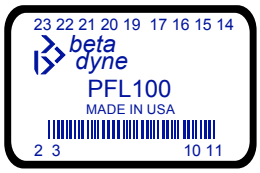

Functional Description

The PFL100 is an EMI filter designed to meet conducted and radiated emissions per CS01, CE03 per MIL-STD-461-E and FCC class A and B .The PFL100 is packed in a 0.80” x 1.25” x 0.4” metal case and operates from -40º to 100º C without derating. The filter is designed to filter EMI emissions. For example, it can be used with 25SXX/XX (25W), EBL30SXX/XX (30W) or 35SXXX/XX (35W) converters to offer an inexpensive solution to reduce noise compared to hybrids.

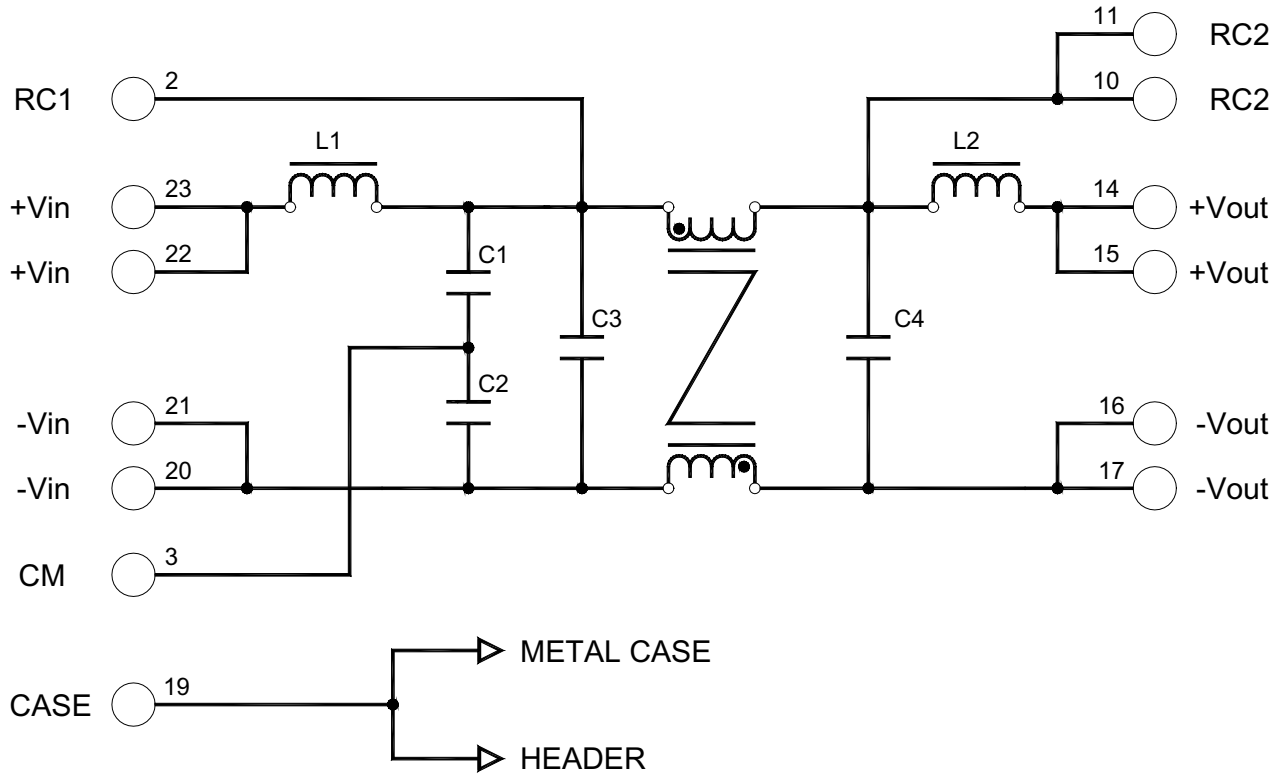

Typical Block Diagram

ABSOLUTE MAXIMUM RATINGS

PARAMETER	MIN	TYP	MAX	UNIT
Input Voltage (continuous)			100	V
Input Voltage transient 1 sec.			100	V
Output Current			3	A
Power Dissipation (Full load 100ºC)			.5	W
Operating Temperature	-40		+100	ºC
Storage Temperature	-65		+125	ºC

Electrical Specifications

INPUT SPECIFICATIONS

PARAMETER	CONDITION / NOTE	MIN	TYP	MAX	UNIT
Input Voltage Range	Continuous	9	28	100	Vdc
	Transient 1 sec.			100	Vdc
Input Current				3	Adc
Output Voltage (2)	Continuous		Vout=Vin-I_{IN} R_{DC}		
Output Current	Continuous			3	Adc
DC Resistance	Positive Rail @ 100 ºC		.12	.20	mΩ
	Negative Rail @100 ºC		.02	.05	mΩ
Efficiency	Vin=12V, Iout=3A		99.5		%
Noise Rejection	F= 300 KHZ See figure 5 through 12	60	66		dB
Capacitance	Pin to Case		2.0		nF
Isolation	Any Pin to Case 500 V	100			MΩ
MTBF	per MIL-HNBK-217F(Ground benign, +25 ºC)		$47.6x10^6$		hours
	per MIL-HNBK-217F(Ground benign, +50 ºC)		$17.8x10^6$		hours
	per MIL-HNBK-217F(Ground mobile, +50 ºC)		$1.01x10^6$		hours
Weight	1.4 oz(40g)				

MECHANICAL SPECIFICATION

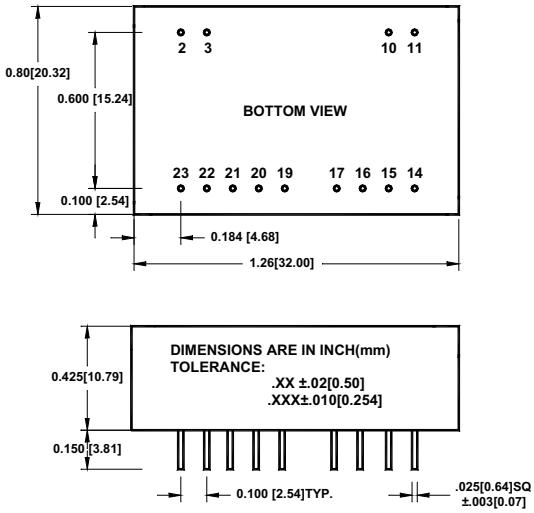

Pin	Function
2	RC1
3	CM
10	RC2
11	RC2
14	+V OUT
15	+V OUT
16	-V OUT
17	-V OUT
19	CASE
20	-V IN
21	-V IN
22	+V IN
23	+V IN

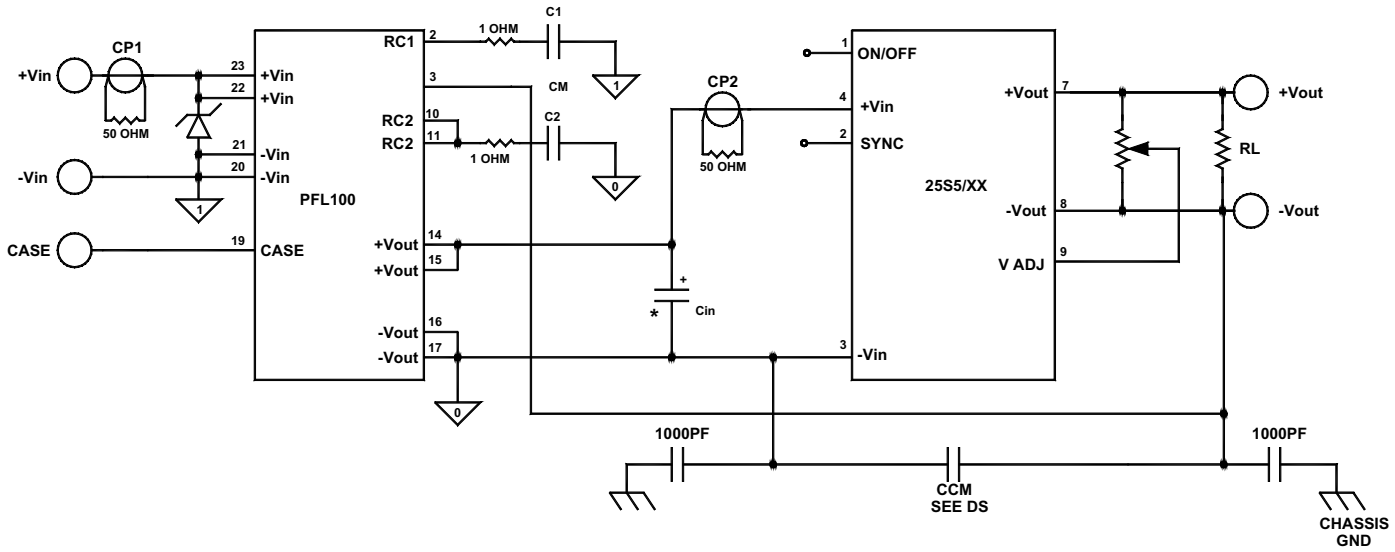

Figure#1: TEST CIRCUIT FOR PFL100 WITH A 25S5/12 DC/DC CONVERTER

NOTES:

1. C1,C2 = 100µF@100V (For applications below zero Celsius use ceramics with X7R or X5R material)
2. C_{IN}= 22µF@100V (Mandatory)
3. CP1= Current Probe 1, CP2= Current Probe 2

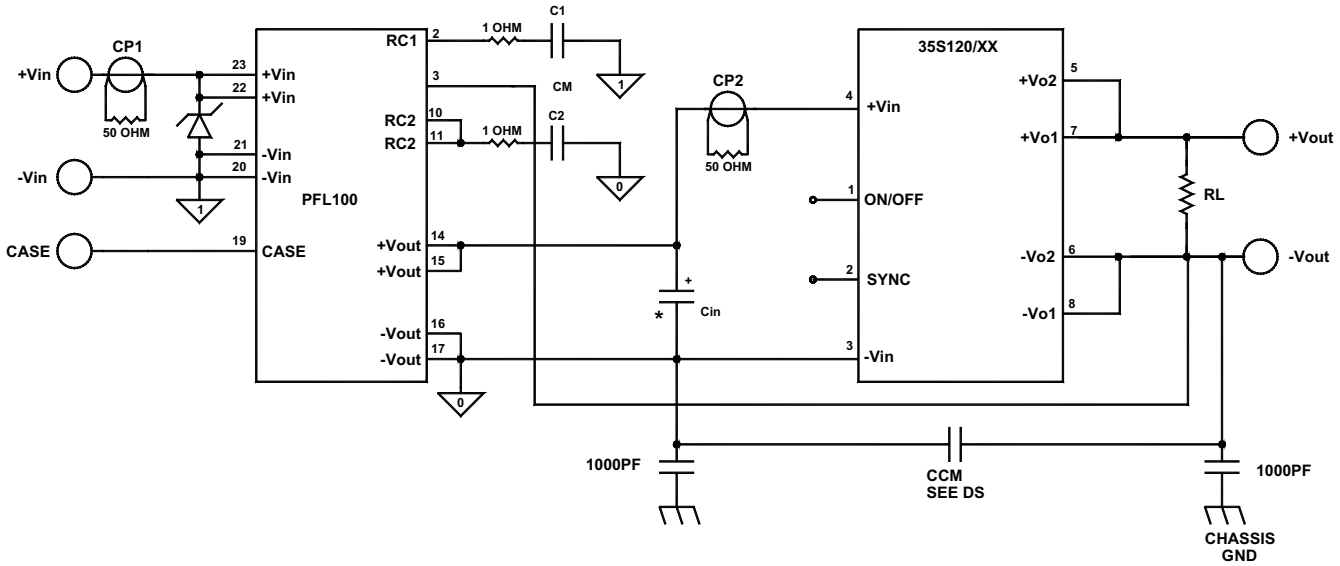

Figure#2: TEST CIRCUIT FOR PFL100 WITH A 35S120/12 DC/DC CONVERTER

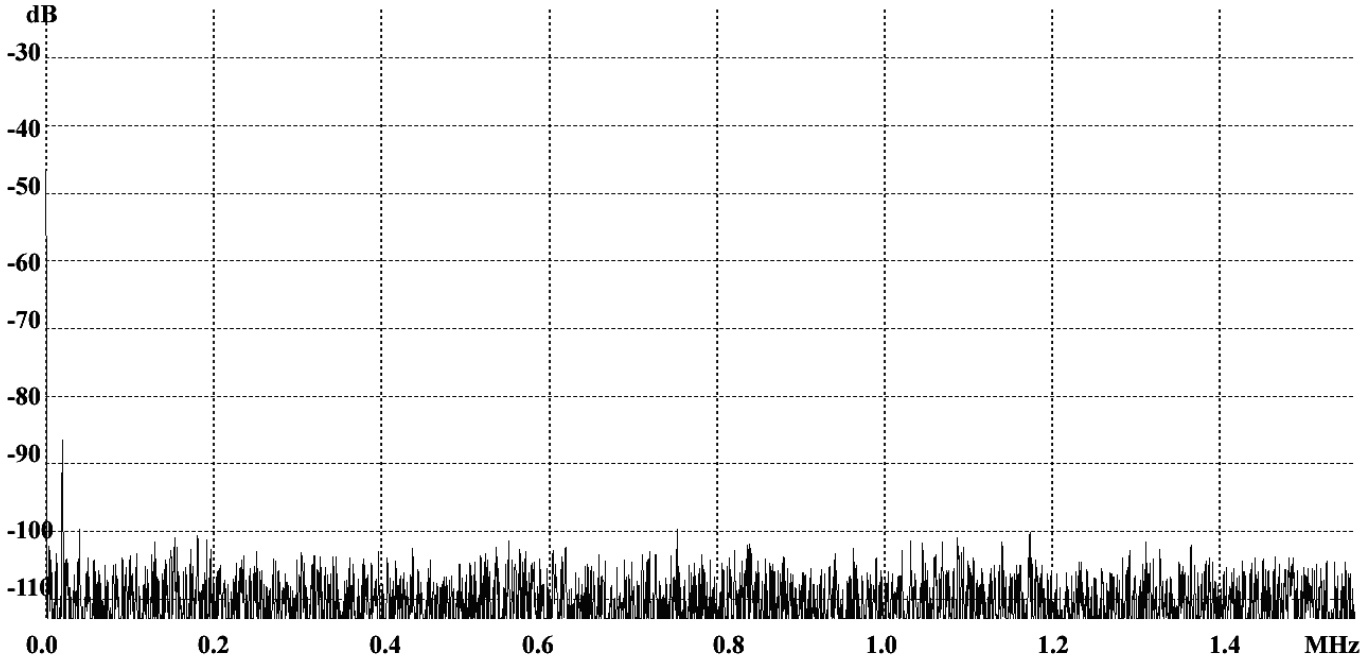

Figure#3: Reflected ripple spectrum of a single 25S5/12 with PFL100 at CP1 as shown in Figure 1.

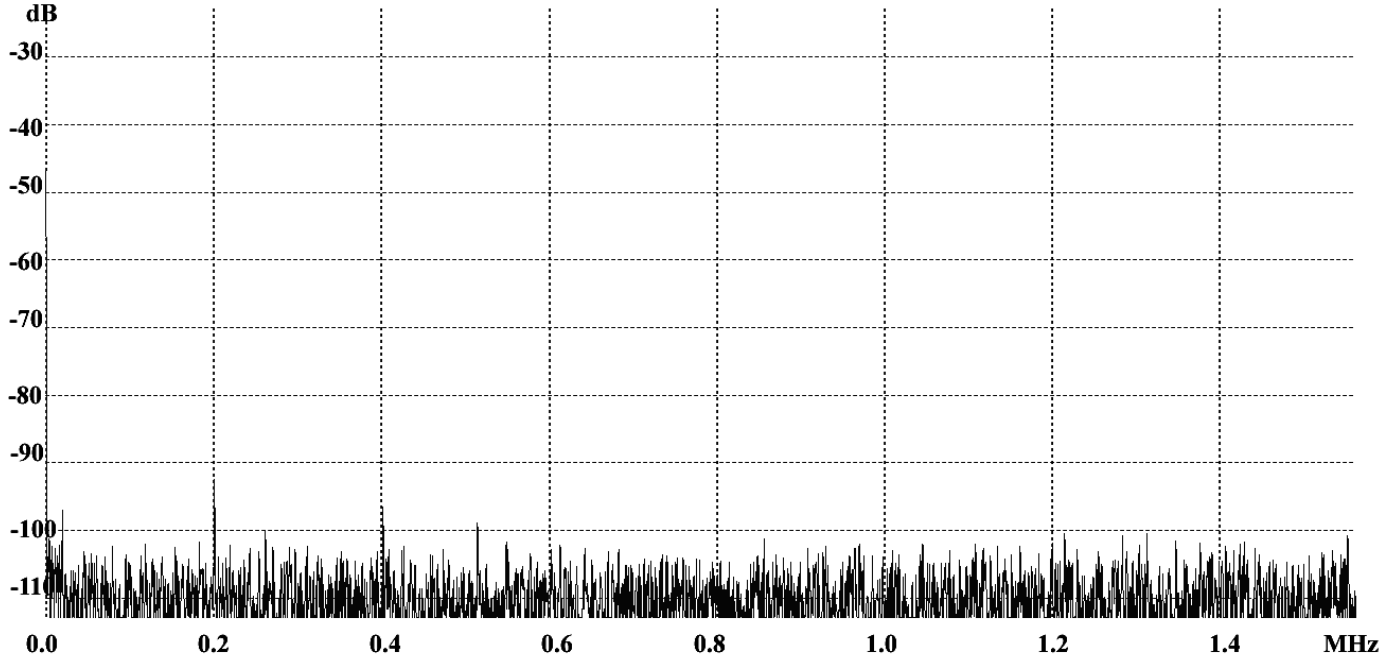

Figure#4: Reflected ripple spectrum of a single 25S5/12 with PFL100 at CP2 as shown in Figure 1.

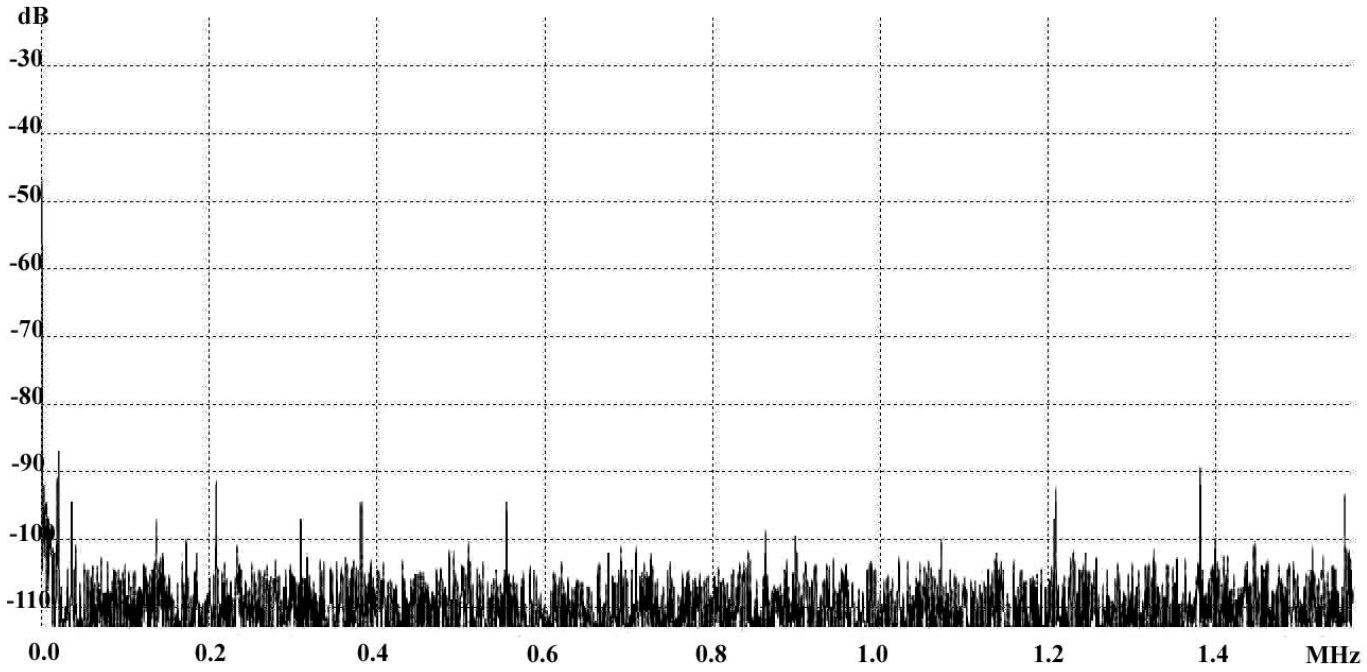

Figure#5: Reflected ripple spectrum of a single 35S120/12 with PFL100 at CP1 as shown in Figure 2.

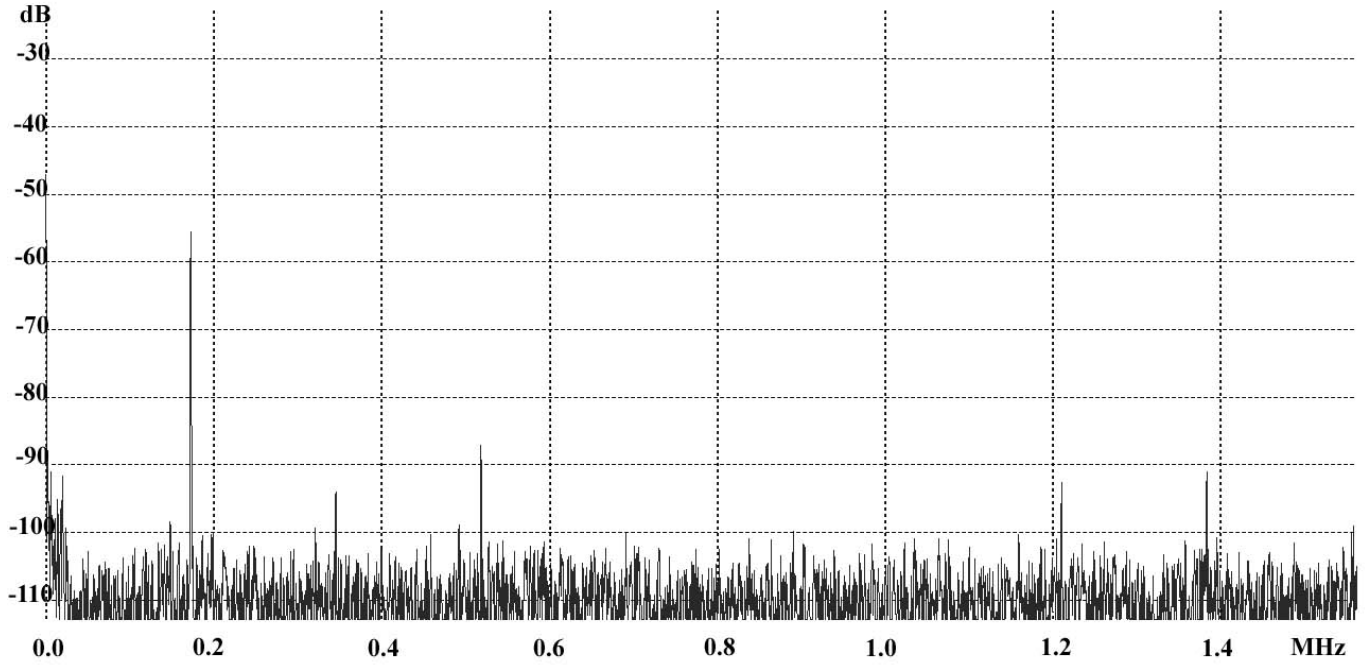

Figure#6: Reflected ripple spectrum of a single 35S120/12 with PFL100 at CP2 as shown in Figure 2.

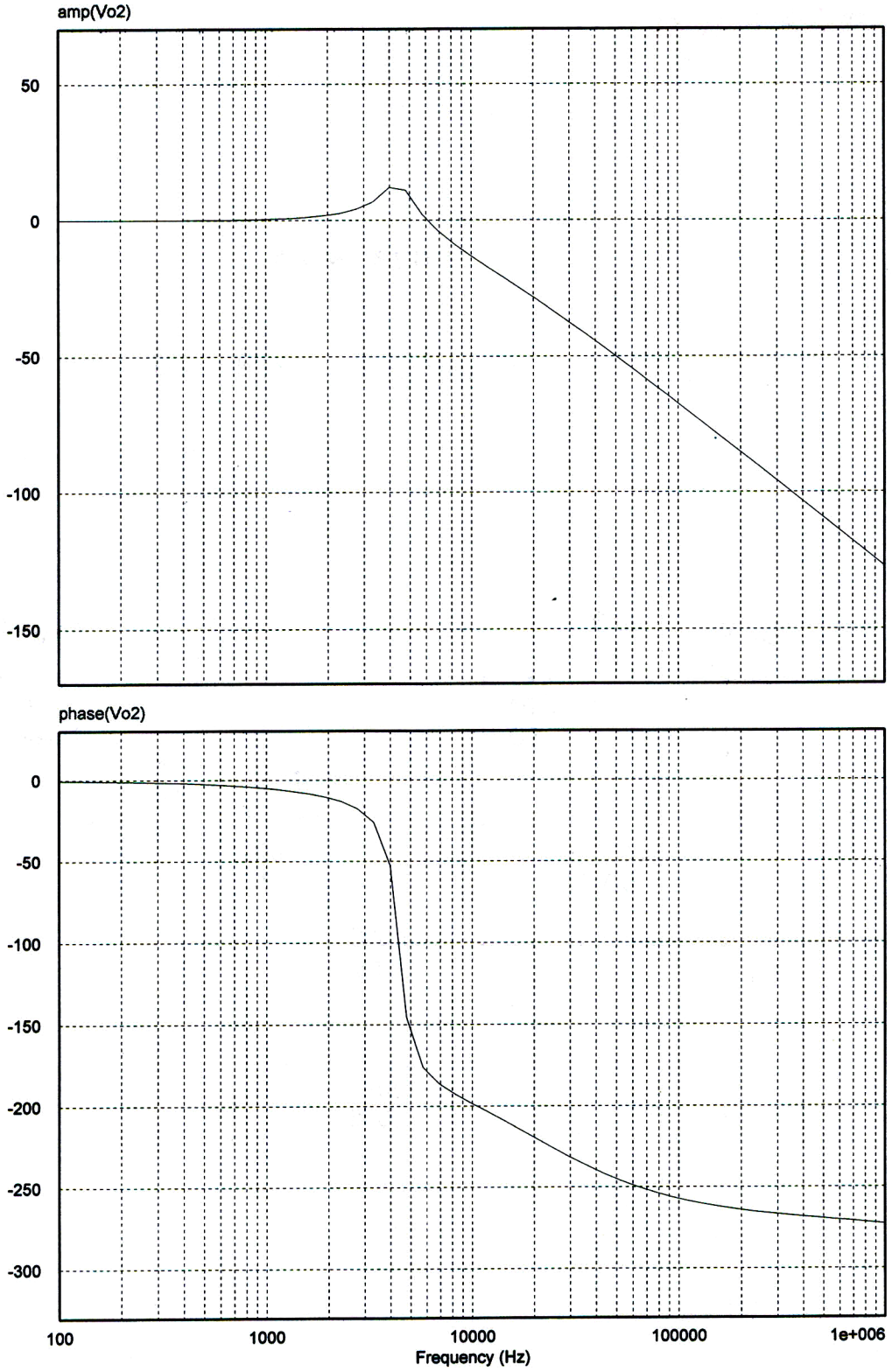

Figur#7: Gain and Phase Margin of Differential Mode Filter

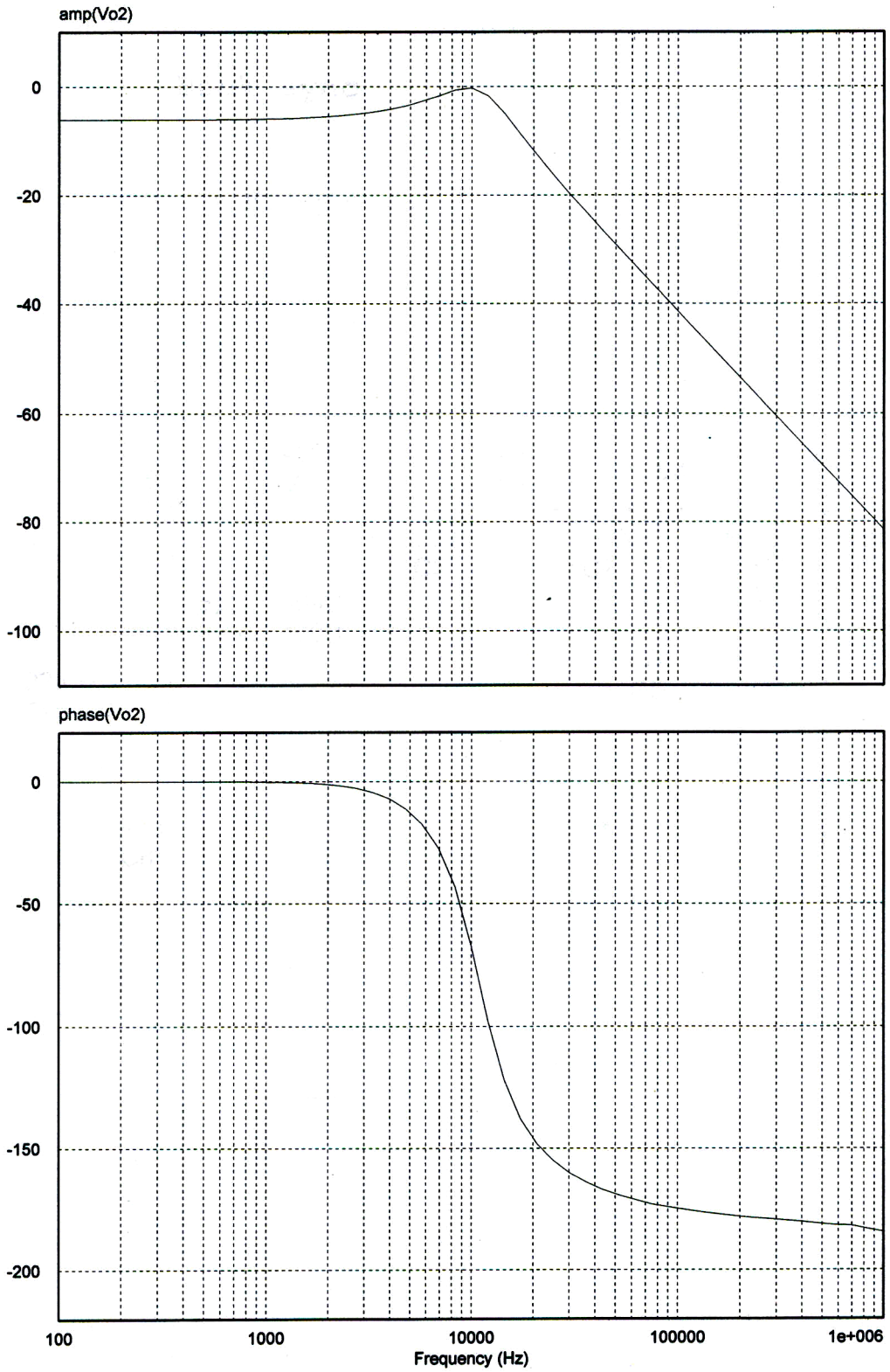

Figure#8: Gain and Phase Margin of Common Mode Filter