# 200S12/48

## 200W Single DC/DC Converter

*$48V_{IN}$, $12V_{OUT}$@16.66A*


## *Key Features*

- Efficiency up to 87%
- 1500Vdc input-to-output isolation
- 2:1 input voltage range
- Input undervoltage protection
- Output overvoltage protection
- Soft start
- Adjustable output
- 160kHz switching frequency
- Thermal protection
- Six-sided shielding

## *Functional Description*

The 200S12/48 is an 200W single output, isolated DC/DC converter that accepts $48V_{IN}$ and delivers $12V_{OUT}$@16.66A to the load. Its high switching frequency of 160kHz, SMD design, and thermal management improves efficiency and reliability. The converter is designed and thoroughly tested for an input-to-output isolation of 1500Vdc.

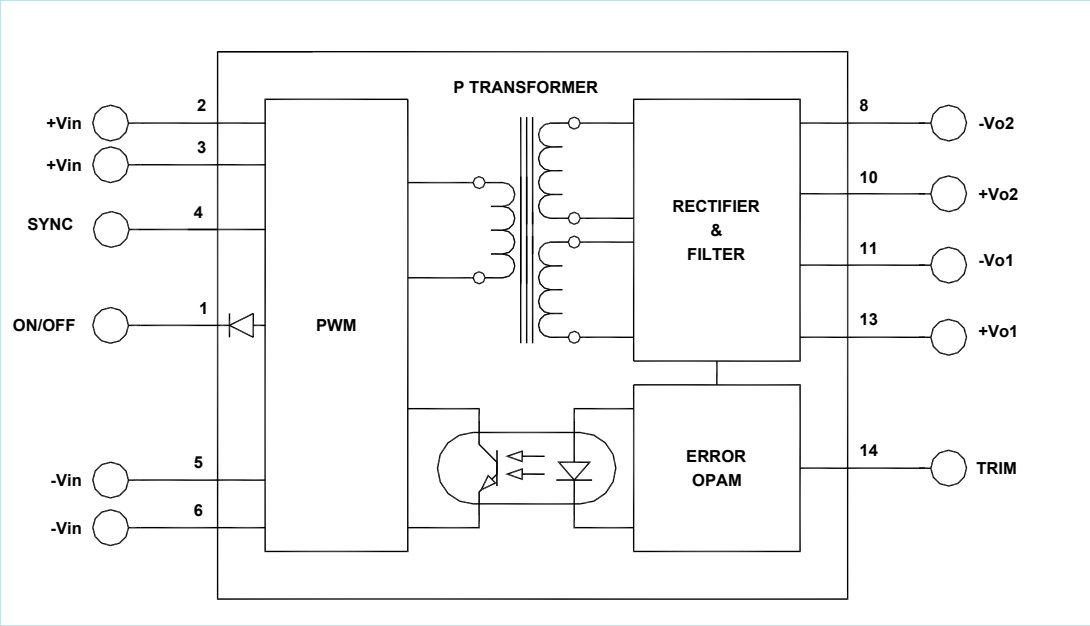


**Typical Block Diagram**

## *Electrical Specifications*

*Unless otherwise specified, all parameters are given under typical +25°C with nominal input voltage and under full output load conditions.*

### *INPUT SPECIFICATIONS*

| PARAMETER | CONDITION / NOTE | MIN | TYP | MAX | UNIT |
|---|---|---|---|---|---|
| Input Voltage Range | | 36 | 48 | 72 | Vdc |
| Input Startup Voltage | | 35 | | | Vdc |
| Input Filter | C | | | | |
| Reverse Polarity | External series-blocking diode | | | | |
| Reflected Ripple | | | 120 | | mA |
| No Load Input Current | | | 50 | | mA |
| Full Load Input Current | | | 4750 | | mA |
| Input Surge Current (20µS Spike) | | | | 10 | A |
| Short Circuit Current Limit | | | 150 | | % $I_{IN}$ |
| Off State Current | | | 1 | | mA |
| Remote ON/OFF Control | | | | | |
| Supply ON | Pin 1 Open (Open circuit voltage: 13V max.) | | | | |
| Supply OFF | | 0 | .100 | .150 | Vdc |
| ON/OFF Current | | | 1 | 1.50 | mA |
| Logic Input Reference | -Input for ON/OFF | | | | |
| Logic Compatibility for Reference | TTL Open Collector or CMOS Open Drain | | | | |
| Sync Input | TTL (AC Coupled) | 2.5 | | 5 | Vdc |
| Sync Input Frequency Range | | 310 | 320 | 360 | kHz |

### *OUTPUT SPECIFICATIONS*

| PARAMETER | CONDITION / NOTE | MIN | TYP | MAX | UNIT |
|---|---|---|---|---|---|
| Output Voltage | | | 12 | | Vdc |
| Output Voltage Accuracy | | | ±1 | ±2 | % |
| Output Current | | | 16.66 | | A |
| Ripple & Noise | | | 1 | 2 | $\%V_{PP}$ of $V_{OUT}$ |
| Line Regulation | | | ±0.5 | ±1 | % |
| Load Regulation | | | ±1 | ±2 | % |
| Output Overvoltage Protection | | | 120 | | % of $V_{OUT}$ |
| Temperature Coefficient @ FL | | | 0.02 | | %/°C |
| Transient Response Time (to within 1% of V) | 50% FL to FL to 50% FL, | | 250 | | µS |
| Short Circuit Protection | By input current limiting | | | | |
| Output Adjust Range | | | ±5 | | % |

### *GENERAL SPECIFICATIONS*

| PARAMETER | CONDITION / NOTE | MIN | TYP | MAX | UNIT |
|---|---|---|---|---|---|
| Efficiency | | | 87 | | % |
| Isolation Voltage (1 min.), Input to Output | 100% Tested in production | | 1500 | | Vdc |
| Isolation Resistance | | | $10^9$ | | Ω |
| Isolation Capacitance | | | 180 | | pF |
| Switching Frequency | | | 160 | | kHz |
| Turn On Delay | See Figure 4 | | 7 | 10 | mS |
| Soft Start Time | See Figure 4 | | 7 | 15 | mS |

### *ENVIRONMENTAL SPECIFICATIONS*

| PARAMETER | CONDITION / NOTE | MIN | TYP | MAX | UNIT |
|---|---|---|---|---|---|
| Operating Temperature Range (Ambient)* | | -40 | | +70 | °C |
| Storage Temperature Range | | -55 | | +125 | °C |
| Thermal Resistance | °C per watt internally dissipated | | 2.5 | 3 | $°C/W_{DISS}$ |
| Cooling | Free air convection | | | | |
| EMI/RFI | Six-sided continuous shielded metal case | | | | |
| MTBF | per MIL-HNBK-217F (Ground benign, +25°C) | | 400,000 | | hours |
| Humidity | Up to 95% non-condensing | | | | |
| Thermal Shutdown | Case Temperature | | 110 | 115 | °C |
| Thermal Hysterisis | | | 25 | 35 | °C |

* See footnotes 1 and 2.

### *PHYSICAL CHARACTERISTICS*

| PARAMETER | CONDITION / NOTE | MIN | TYP | MAX | UNIT |
|---|---|---|---|---|---|
| Dimensions (L×W×H) | 3.00×2.56×0.75 in. (76.20×65.02×19.05mm) | | | | |
| Weight | 7.87 oz. (223g) | | | | |
| Case Material | Black coated copper | | | | |
| Shielding Connection | $+V_{IN}$ (Pins 2 & 3) | | | | |

[1] Adequate insulation is to be provided to the converters at the end usage as per applicable requirements.
[2] Temperature rise on the case of the converters is to be considered during the end usage as per applicable requirements.
[3] The maximum input current at any given input range measured at minimum input voltage is given as $1.6*I_{NOMINAL}$. Nominal input current is the typical value measured at the input of the converter under full-load room temperature and nominal input voltage (24Vdc).
[4] Measured with 100µF capacitor at the input power pins.

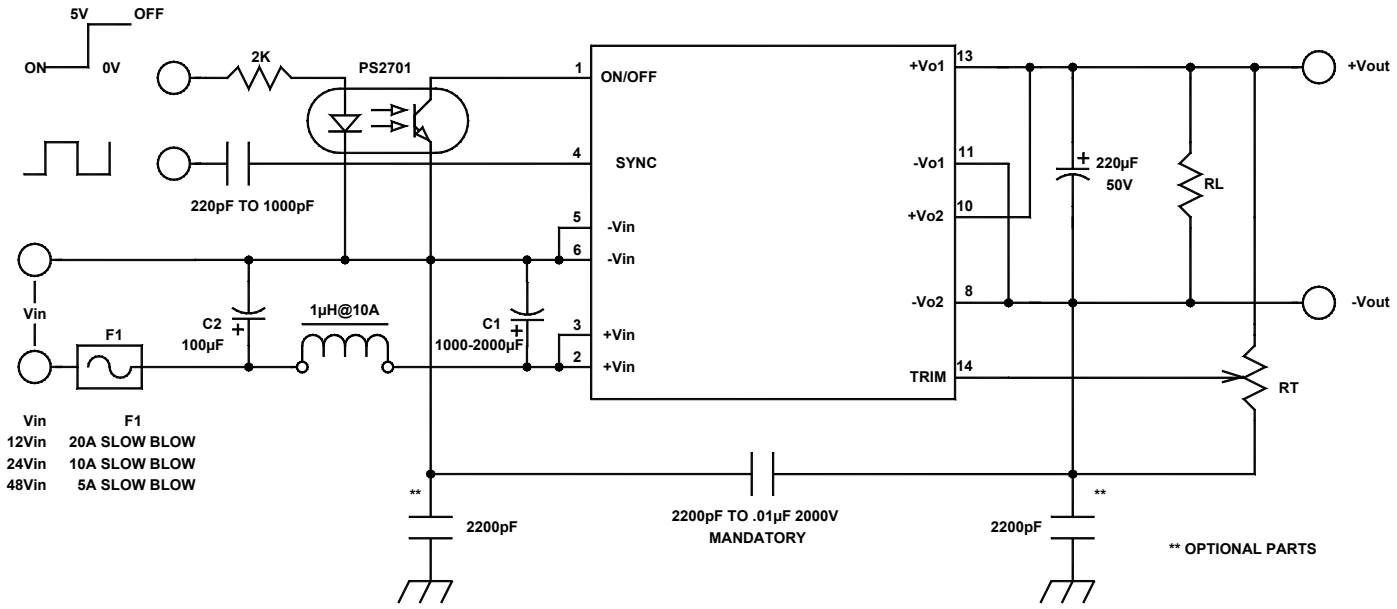


**FIGURE 1. Typical connection diagram of single output converter**

### *EXTERNAL TRIMMING OF OUTPUT VOLTAGES*

To trim the output voltage DOWN, connect a 5% ¼W resistor between the $+V_{O1}$ output and trim pin of the converter. To trim the output voltage UP, connect a 5% ¼W resistor between the $-V_{O1}$ output and trim pins of the converter. For UP/DOWN trimming capability, connect a 20kΩ potentiometer between the + and - output pins, with the wiper arm connected to the trim pin.

The trim resistors/potentiometer can be connected at the converter output pins or the load. However, if connected at the load, the resistance of the run becomes part of the feedback network which improves load regulation. If the load is some distance from the converter, use of #20 guage wire is recommended to avoid the excessive voltage drop due to the resistsnce of the circuit paths.

See our application notes:
DC-001: Testing Transient Response in DC/DC Converters.
DC-004: Thermal Considerations for DC/DC Converters.

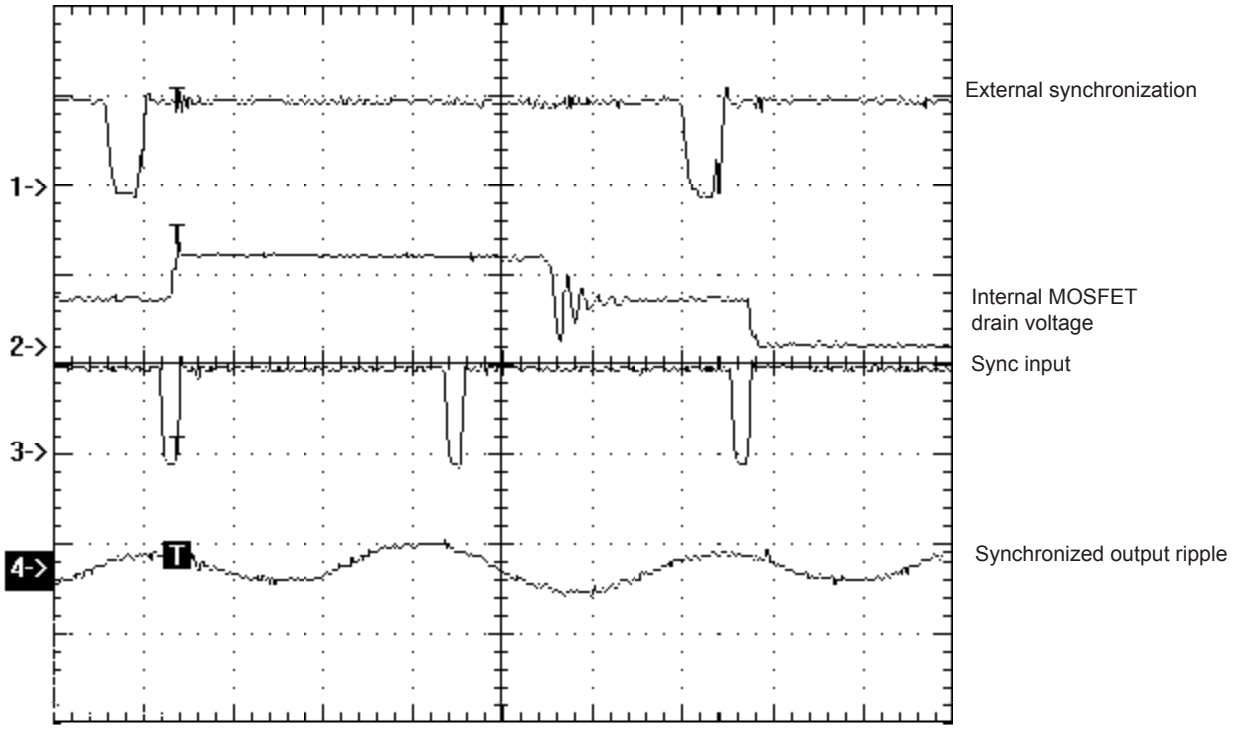


**FIGURE 2. Synchronization waveforms**

### *EXTERNAL SYNCHRONIZATION*

The converter can be synchronized to an external clock by driving the SYNC pin (pin 2) directly. The driving signal frequency must be 330kHz ±5% (3% to 4% low, 96% to 97% high duty cycle). When the external clock is AC-coupled to the SYNC pin of the converter through a ceramic capacitor, connect a signal Schotky diode with the cathode connected to the SYNC pin and the anode to $-V_{in}$ (See Figure 1). AC coupling reduces the power required for driving multiple converters and allows for continuous operation of the other synchronized converters in case the driving signals is missing or a short circuit develops at one of the sync inputs.

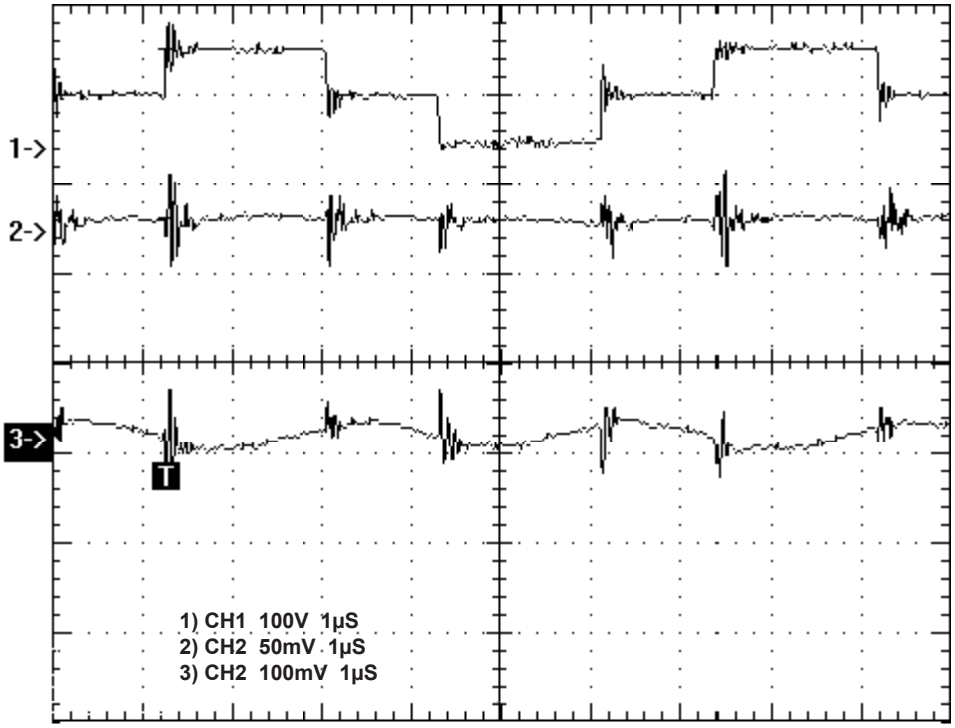


Reflected ripple with 100µF $C_{IN}$

$V_{OUT}$ with 3.3µF ceramic capaci-

**FIGURE 3. Reflected ripple and $V_{OUT}$**

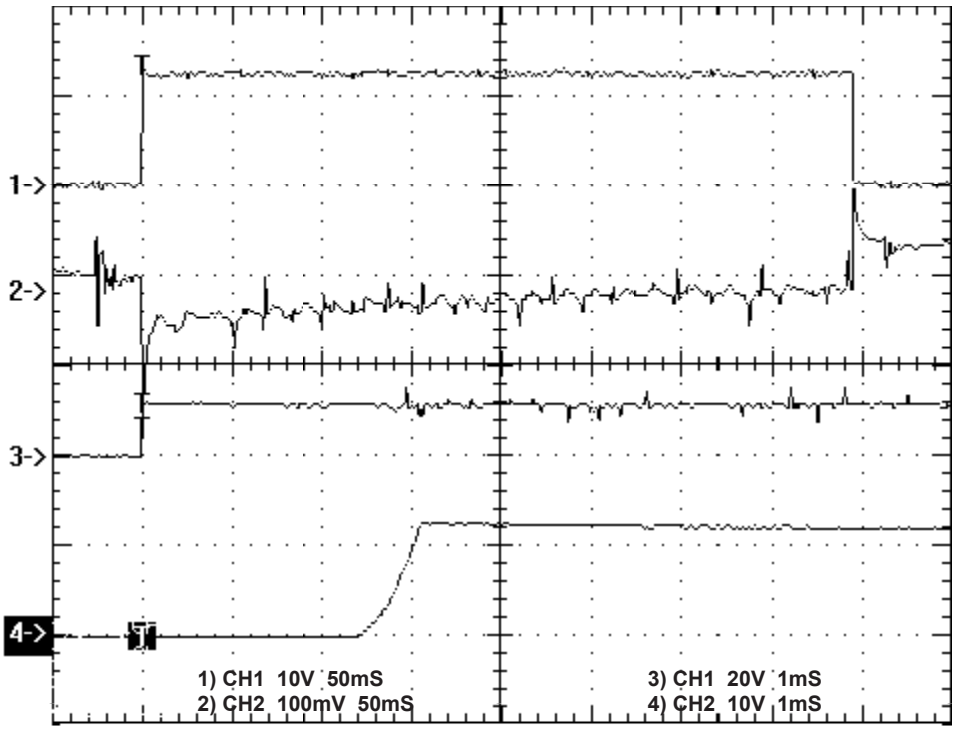


Transient response

Turn on delay (On/Off)

**FIGURE 4. Transient response and turn on delay with soft start**

## HEATSINK SPECIFICATIONS

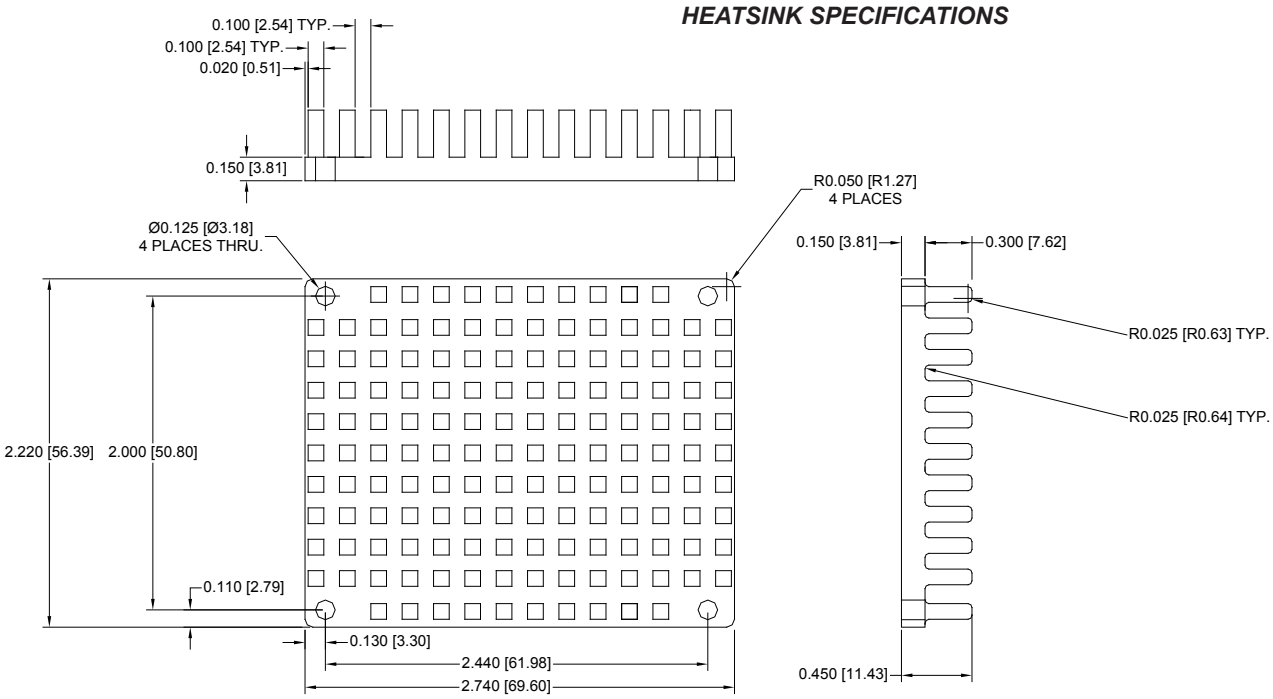


## MECHANICAL SPECIFICATIONS

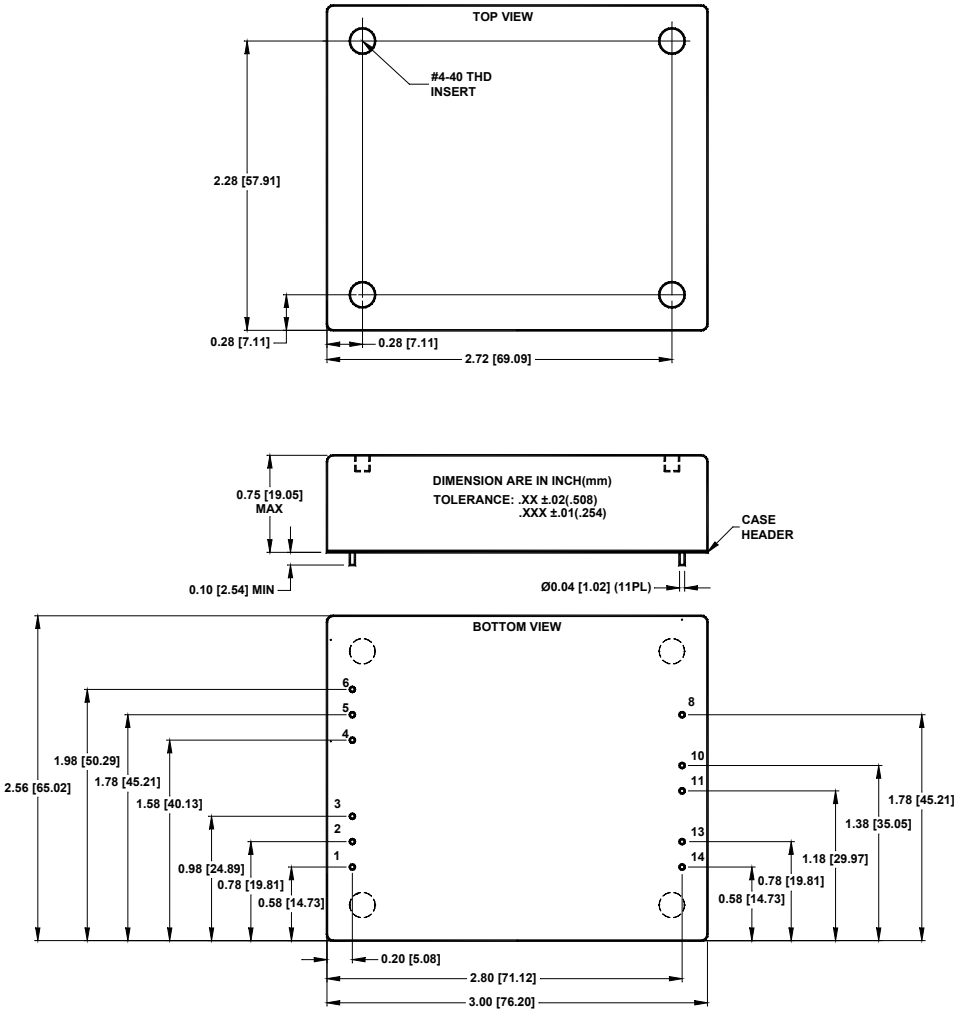


| Pin | Function |
|---|---|
| | ***DUAL*** |
| 1 | ON/OFF |
| 2 | $+V_{IN}$ |
| 3 | $+V_{IN}$ |
| 4 | SYNC |
| 5 | $-V_{IN}$ |
| 6 | $-V_{IN}$ |
| 8 | $-V_{O2}$ |
| 10 | $+V_{O2}$ |
| 11 | $-V_{O1}$ |
| 13 | $+V_{O1}$ |
| 14 | $V_{OUT}$ ADJ |