PRELIMINARY

AHV75S75/70

75W ADJUSTABLE HIGH VOLTAGE DC/DC CONVERTER

2 to 75Vdc Single Output, 65-75Vdc Input

Key Features

- Efficiency up to 81%
- Six-sided shielding
- Soft start
- Short circuit and thermal protection
- Adjustable output

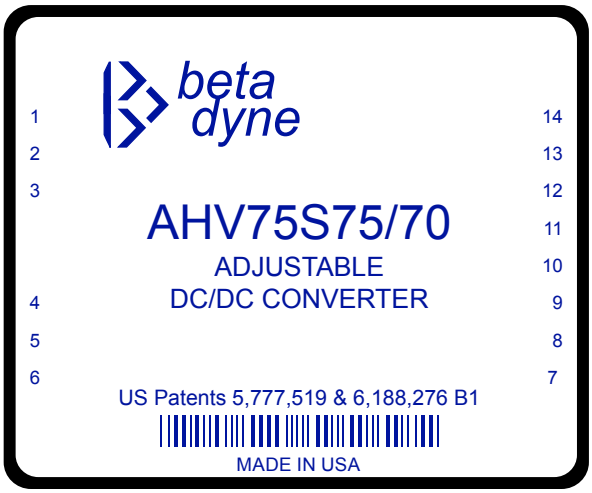

Beta Dyne is protected under various patents, including but not limited to U.S. Patent numbers: 5,777,519; 6,188,276; 6,262,901; 6,452,818; 6,473,3171.

Applications

High Voltage Programmable

Voltage Source

Instrumentation

Test & Measurement

Telecom

Functional Description

The adjustable high voltage AHV75S75/70 series DC/DC converters is a 75W multiple output adjustable converter with output voltage range from 2V to 75V, with an input voltage of 65-75V. The output is adjusted either from a 0V to 2.5V or voltage source or a 0-1mA current source. Standard features include; input to output isolation, soft start, external synchronization, input under/over voltage protection and output over voltage protection. Packaged in a 3x2.5x.75 copper case for EMI/RFI shielding and good thermal performance from -25 to +71°C.

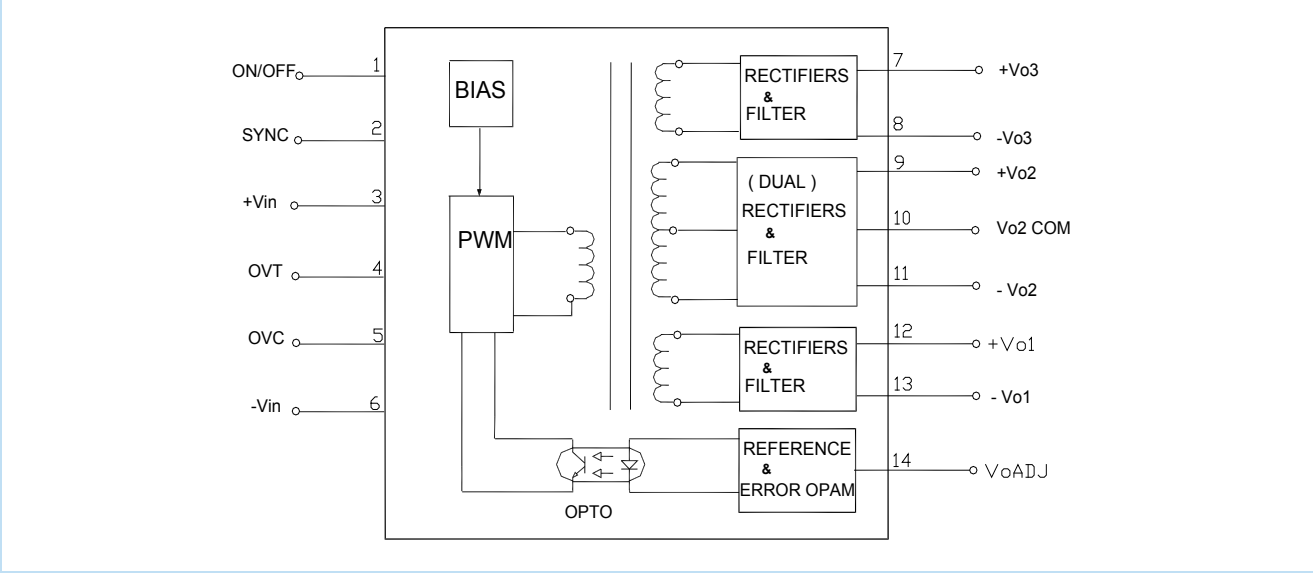

Typical Block Diagram

Unless otherwise specified, all parameters are given under typical +25°C with nominal input voltage and under full output load conditions.

Electrical Specifications

INPUT SPECIFICATIONS

PARAMETER	CONDITION / NOTE	MIN	TYP	MAX	UNIT
Input Voltage Range		65	70	75	Vdc
Input Filter	LC				
Reverse Polarity	Internal parasitic shunt diodes				
Reflected Ripple	I_O=1A, Vin=70V		150		mA_{pk-pk}
Full Load Input Current			1280		mA
No Load Input Current	Vin=70V, Vout=75V@1A		30		mA
Input Surge Current (20µS Spike)				10	A
Short Circuit Current Limit	See Short Circuit Protection		150		% I_{IN}
Off State Current			750		µA
Remote ON/OFF Control					
Supply ON	Pin 1 Open (Open circuit voltage: 13V max.)				
Supply OFF		-0.6	0	0.8	Vdc
Logic Input Reference	To $-V_{IN}$ for ON/OFF and SYNC				
Logic Compatibility for Reference	TTL Open Collector or CMOS Open Drain				
OVP Voltage	Open drain voltage				Vdc
Sync, High		2		6	Vdc
Sync, Low		0		0.8	Vdc

OUTPUT SPECIFICATIONS

PARAMETER	CONDITION / NOTE	MIN	TYP	MAX	UNIT
Output Voltage			2-75		
Output Voltage Accuracy			±1	±2	%
Ripple & Noise			1	2	%
Control Voltage Range Vc		0		2.5	V
Vc Current	Sink / Source			1	mA
Output Current				1000	mA
Line Regulation			±1.0	±2.0	%
Temperature Coefficient @ FL			0.02		%/°C
Transient Response Time	50% FL to FL to 50% FL		200	250	µS
Short Circuit Protection	By input current limiting				

GENERAL SPECIFICATIONS

PARAMETER	CONDITION / NOTE	MIN	TYP	MAX	UNIT
Efficiency			81		
Isolation Voltage (1 min.), Input to Output			1500		Vdc
Isolation Resistance			10^9		Ω
Isolation Capacitance			2700		pF
Switching Frequency, Power Stage			200		kHz
Switching Frequency, BIAS Stage			330		kHz
Turn On Delay			12	20	mS
Soft Start Time			12	20	mS

ENVIRONMENTAL SPECIFICATIONS

PARAMETER	CONDITION / NOTE	MIN	TYP	MAX	UNIT
Operating Temperature		-25		+71	°C
Storage Temperature Range		-40		+100	°C
Derating	See Figure 1				
Humidity	Up to 95% non-condensing				
Cooling	Free-air convection				
EMI/RFI	Six-sided continuous shielded copper case				
MTBF	per MIL-HNBK-217F (Ground benign, +25°C)		485,000		hours

PHYSICAL CHARACTERISTICS

PARAMETER	CONDITION / NOTE	MIN	TYP	MAX	UNIT
Dimensions (L×W×H)	3.00×2.50×0.75 in. (76.20×63.50×19.5mm)				
Weight	7.9 oz. (225g)				
Case Material	Coated metal				
Shielding Connection,	-Input (Pin 6)				

[1] ! WARNING - Usage of input fuse with adequate ratings is essential to avoid possible hazard and damage of the unit. A suppressor diode with adequate ratings is intended to be connected in series to the supply for reverse polarity protection.
[2] The maximum input current at any given input range measured at minimum input voltage is given as $1.6*I_{NOMINAL}$. Nominal input current is the typical value measured at the input of the converter under full-load room temperature and nominal input voltage.
[3] Adequate insulation is to be provided to the converters at the end usage as per applicable requirements.
[4] Temperature rise on the case of the converters is to be considered during the end usage as per applicable requirements.
[5] Measured with 100µF external capacitor at the input pins.

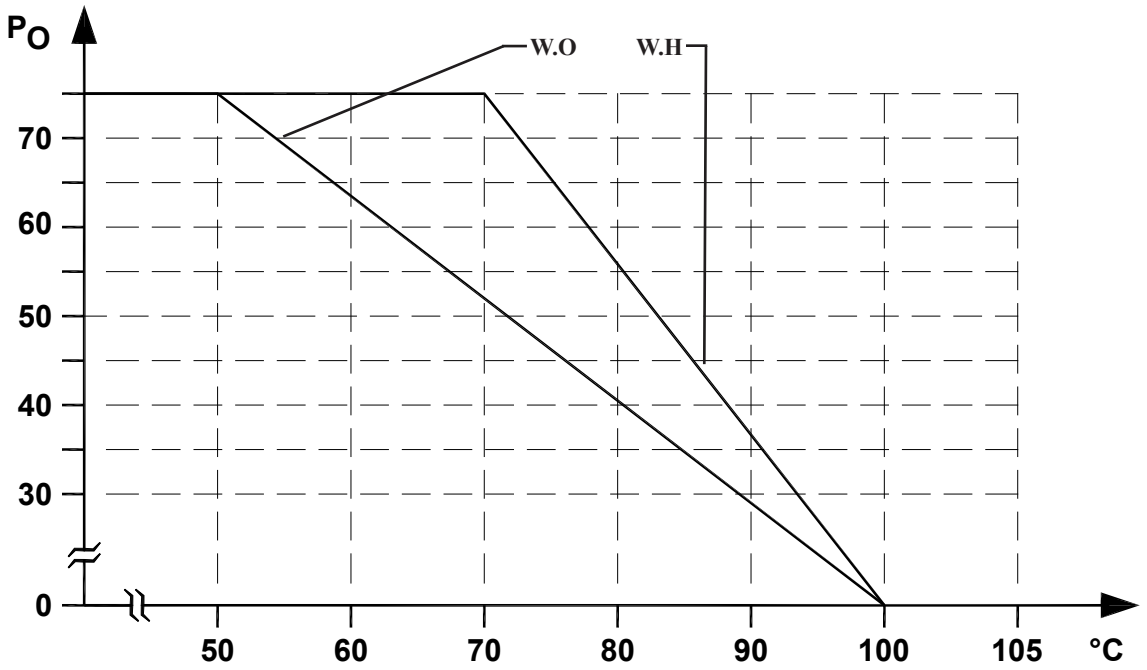

FIGURE 1. Derating Curves of the AHV75S75/70 without and with heatsink.
W.O.= Without Heatsink W.H= With Heatsink

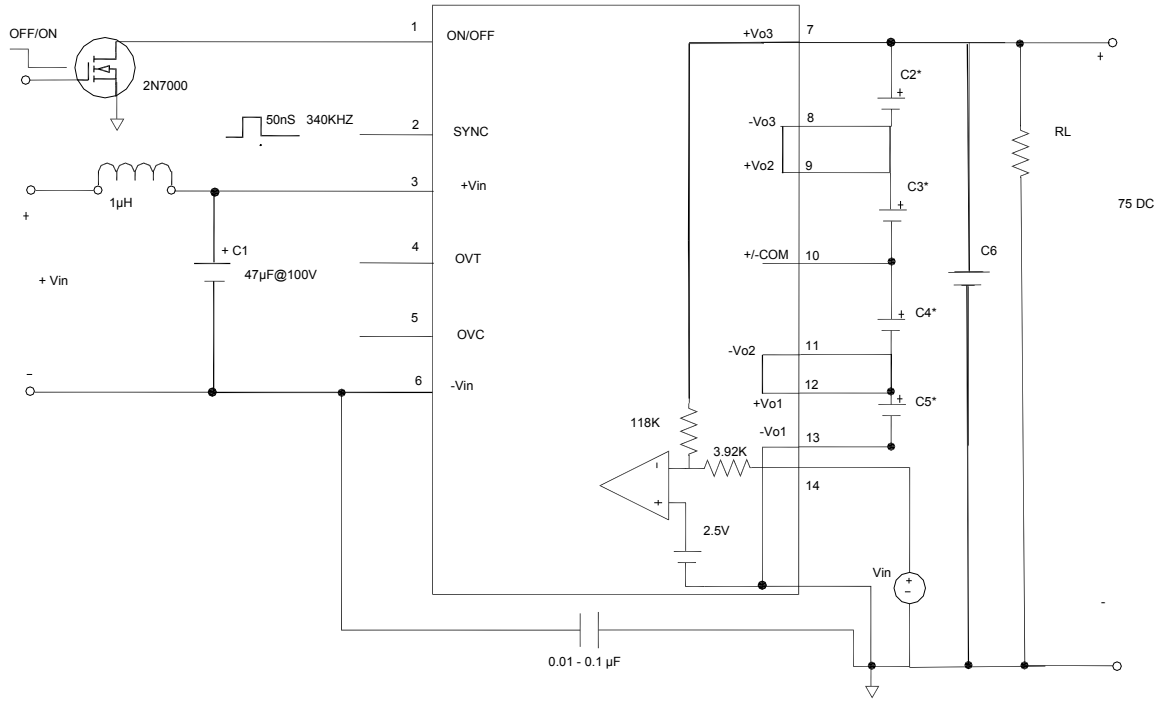

FIGURE 2. Typical Output Diagram Connection of AHV75S75/70 Series Single Output 2 to 75V Output

C2 THROUGH C5(optional), at least = 50µF@100V
C6=100µF@100V(required)

MECHANICAL SPECIFICATIONS

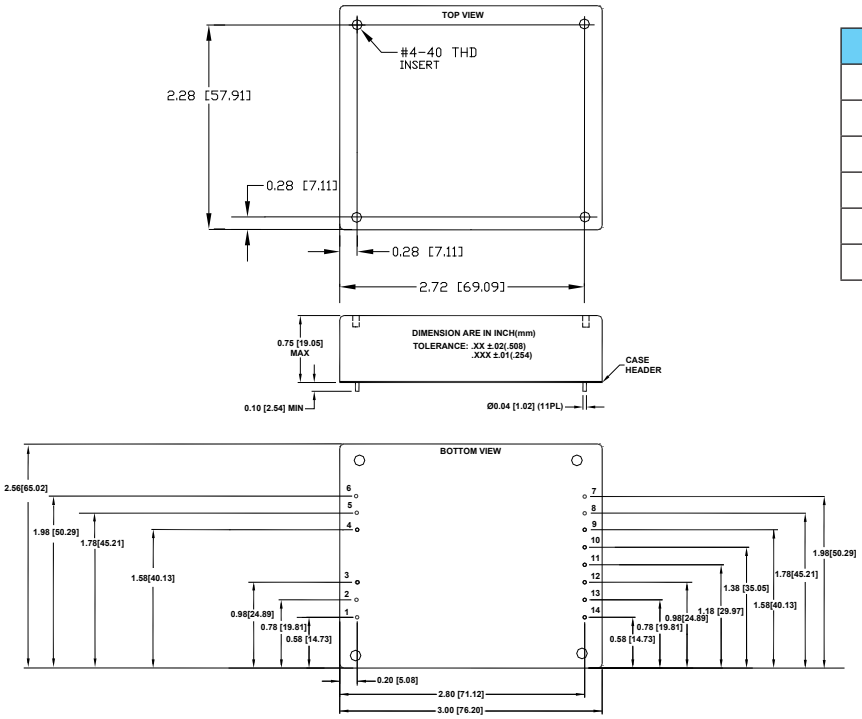

Pin	Function	Pin	Function
1	ON/OFF	7	$+V_{O3}$
2	SYNC	8	$-V_{O3}$
3	$+V_{IN}$	9	$+V_{O2}$
4	NO Pin	10	$\pm V_{O2}$ COM
5	NO Pin	11	$-V_{O2}$
6	$-V_{IN}$	12	$+V_{O1}$
		13	$-V_{O1}$
		14	V_O ADJ

MECHANICAL SPECIFICATIONS for HEAT SINK

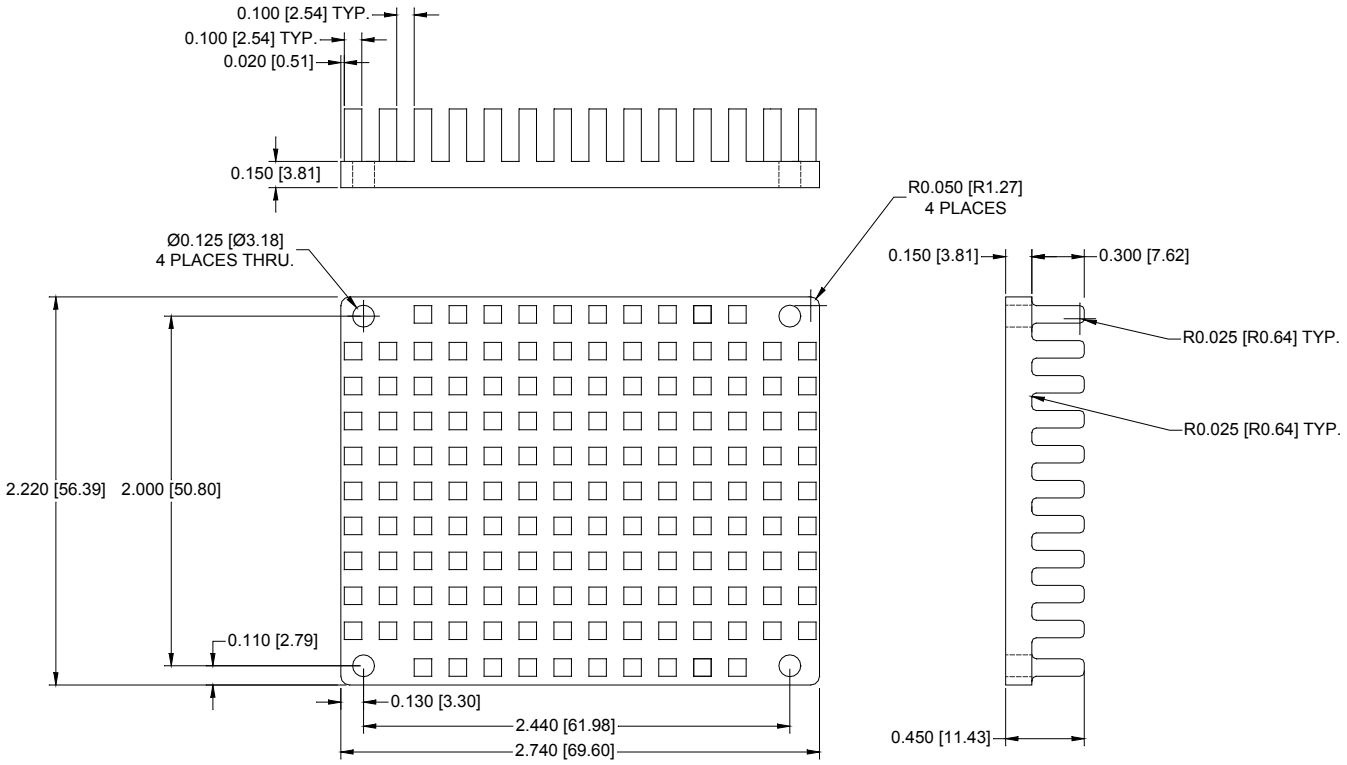

FIGURE 3. Optional Heat Sink for the AHV75S75/70 DC-DC Converter

EXTERNAL SYNCHRONIZATION

The converter can be synchronized to an external clock. The external clock MUST have a higher frequency than that of the converter's switching frequency. The amplitude of the external clock pulse must be 3.7 volts or greater and its duration between 15nS to 150nS for sync pulse detection.

The circuit in Figure 4 can be used to produce a 50nS to 150nS pulse from a square wave. The circuit will be turned on by the negative edge of the square wave and will stay on for approximately 50nS (depending on the R2*C1 time constant) (See Figure 5).

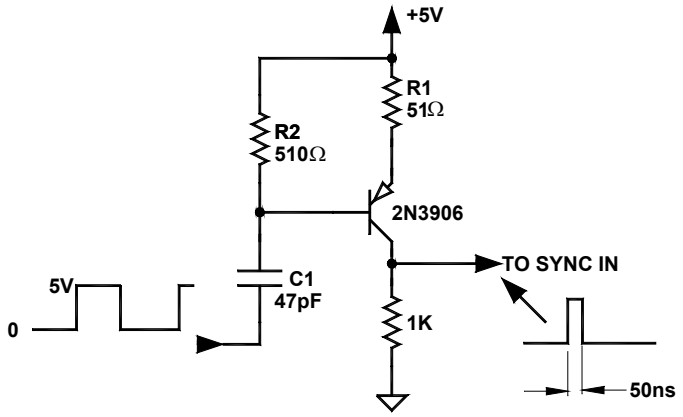

FIGURE 4. 50nS pulse generator from a square wave TTL/5V CMOS clock

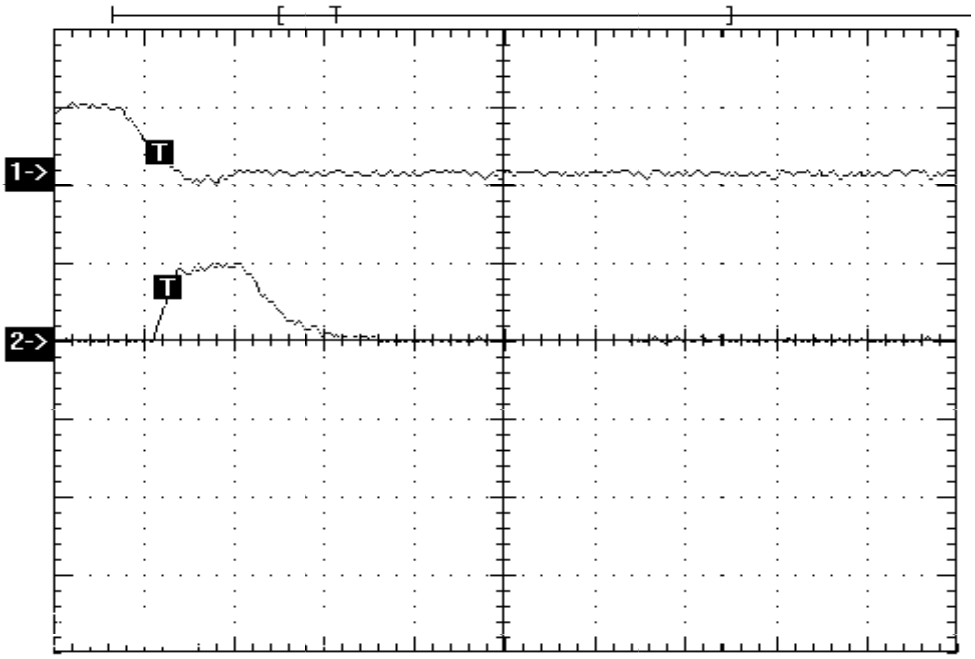

FIGURE 5. Waveforms generated from circuit in Figure 4