BD150006

80W Dual DC/DC Converter

$24V_{IN}$, $200V_{OUT}$@400mA

Key Features

- Efficiency up to 93%
- 1500Vdc input-to-output isolation
- 2:1 input voltage range
- Input undervoltage protection
- Output overvoltage protection
- Soft start
- Adjustable output
- 80kHz switching frequency
- Thermal protection
- Six-sided shielding

Functional Description

The BD150006 is an 80W dual output, isolated DC/DC converter that accepts $24V_{IN}$ and delivers $200V_{OUT}$@400mA to the load. The converter can be synchronized to an external square wave 5V TTL/CMOS clock with a frequency of 160kHz AC-coupled through a 220pF capacitor to Pin 4. Its high switching frequency, SMD design, and thermal management improves efficiency and reliability. The converter is designed and thoroughly tested for an input-to-output isolation of 1500Vdc.

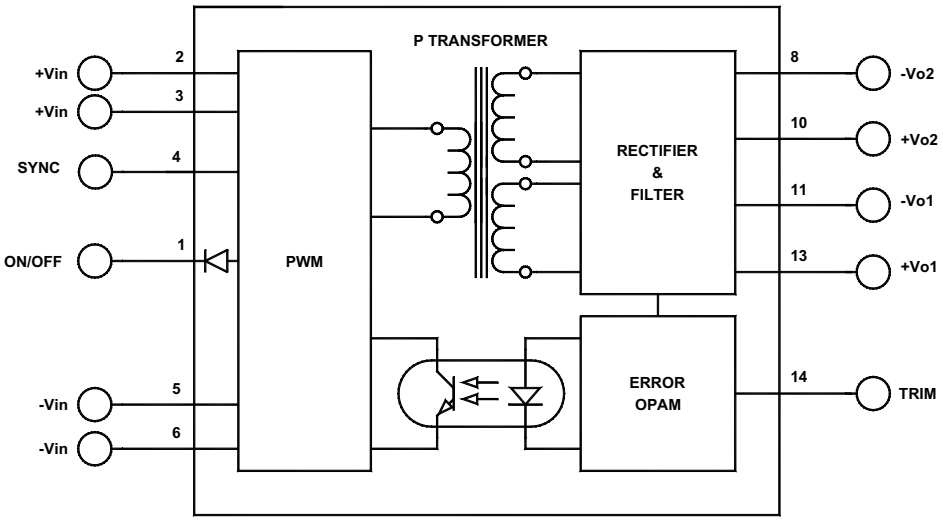

Typical Block Diagram

Electrical Specifications

Unless otherwise specified, all parameters are given under typical +25°C with nominal input voltage and under full output load conditions.

INPUT SPECIFICATIONS

PARAMETER	CONDITION / NOTE	MIN	TYP	MAX	UNIT
Input Voltage Range		21	24	27	Vdc
Input Startup Voltage		20			Vdc
Input Filter	C				
Reverse Polarity	External series-blocking diode				
Reflected Ripple			120		mA
No Load Input Current			50		mA
Full Load Input Current			3584		mA
Input Surge Current (20µS Spike)				10	A
Short Circuit Current Limit			150		% I_{IN}
Off State Current			1		mA
Remote ON/OFF Control					
Supply ON	Pin 1 Open (Open circuit voltage: 13V max.)				
Supply OFF		0		0.8	Vdc
Logic Input Reference	-Input for ON/OFF				
Logic Compatibility for Reference	TTL Open Collector or CMOS Open Drain				
Sync Input	TTL	2.5		5	Vdc
Sync Input Frequency Range		160	170	180	kHz

OUTPUT SPECIFICATIONS

PARAMETER	CONDITION / NOTE	MIN	TYP	MAX	UNIT
Output Voltage			200		Vdc
Output Voltage Accuracy			±1	±2	%
Output Current			400		mA
Ripple & Noise			1	2	%V_{PP} of V_{OUT}
Line Regulation			±0.5	±1	%
Load Regulation			±1	±2	%
Output Overvoltage Protection			120		% of V_{OUT}
Temperature Coefficient @ FL			0.02		%/°C
Transient Response Time (to within 1% of V)	50% FL to FL to 50% FL, See Figure 7		250		µS
Short Circuit Protection	By input current limiting				
Output Adjust Range	See Figures 1–4,		±5		%

GENERAL SPECIFICATIONS

PARAMETER	CONDITION / NOTE	MIN	TYP	MAX	UNIT
Efficiency			93		%
Isolation Voltage (1 min.), Input to Output	100% Tested in production		1500		Vdc
Isolation Resistance			10^9		Ω
Isolation Capacitance			180		pF
Switching Frequency			80		kHz
Turn On Delay	See Figure 7		7	10	mS
Soft Start Time	See Figure 7		7	15	mS

ENVIRONMENTAL SPECIFICATIONS

PARAMETER	CONDITION / NOTE	MIN	TYP	MAX	UNIT
Operating Temperature Range (Ambient)*	See Figure 5	-40		+70	°C
Storage Temperature Range		-55		+125	°C
Thermal Resistance	°C per watt internally dissipated		2.5	3	$°C/W_{DISS}$
Maximum Operating Case Temperature				110	°C
Derating	See Figure 5				
Cooling	Free air convection				
EMI/RFI	Six-sided continuous shielded metal case				
MTBF	per MIL-HNBK-217F (Ground benign, +25°C)		400,000		hours
Humidity	Up to 95% non-condensing				
Thermal Shutdown	Case Temperature		110	115	°C
Thermal Hysterisis			25	35	°C

* See footnotes 1 and 2.

PHYSICAL CHARACTERISTICS

PARAMETER	CONDITION / NOTE	MIN	TYP	MAX	UNIT
Dimensions (L×W×H)	3.00×2.56×0.75 in. (76.20×65.02×19.05mm)				
Weight	7.87 oz. (223g)				
Case Material	Black coated copper				
Shielding Connection	$-V_{IN}$ (Pins 5 & 6)				

[1] Adequate insulation is to be provided to the converters at the end usage as per applicable requirements.
[2] Temperature rise on the case of the converters is to be considered during the end usage as per applicable requirements.
[3] The maximum input current at any given input range measured at minimum input voltage is given as $1.6*I_{NOMINAL}$. Nominal input current is the typical value measured at the input of the converter under full-load room temperature and nominal input voltage (24Vdc).
[4] Measured with 100µF capacitor at the input power pins.

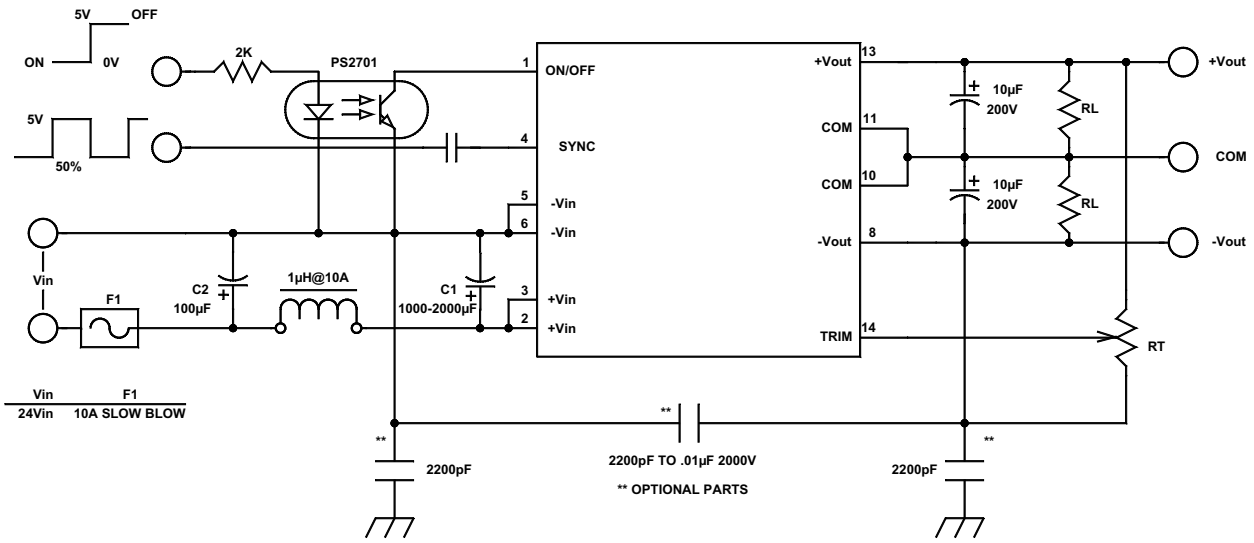

FIGURE 1. Typical connection diagram of dual output converter

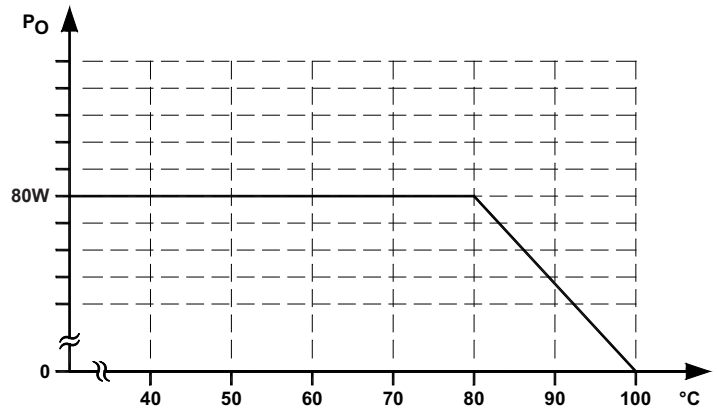

FIGURE 2. Typical derating curve with free air cooling

EXTERNAL TRIMMING OF OUTPUT VOLTAGES

To trim the output voltage DOWN, connect a 5% ¼W resistor between the $+V_{O1}$ output and trim pin of the converter. To trim the output voltage UP, connect a 5% ¼W resistor between the $-V_{O1}$ output and trim pins of the converter. For UP/DOWN trimming capability, connect a 100kΩ potentiometer between the + and - output pins, with the wiper arm connected to the trim pin.

The trim resistors/potentiometer can be connected at the converter output pins or the load. However, if connected at the load, the resistance of the runs becomes part of the feedback network which improves load regulation. If the load is some distance from the converter, the use of #20 gauge wire is recommended to avoid excessive voltage drop due to the resistance of the circuit paths.

See our application notes:
DC-001: Testing Transient Response in DC/DC Converters
DC-004: Thermal Consideration for DC/DC Converters

MECHANICAL SPECIFICATIONS

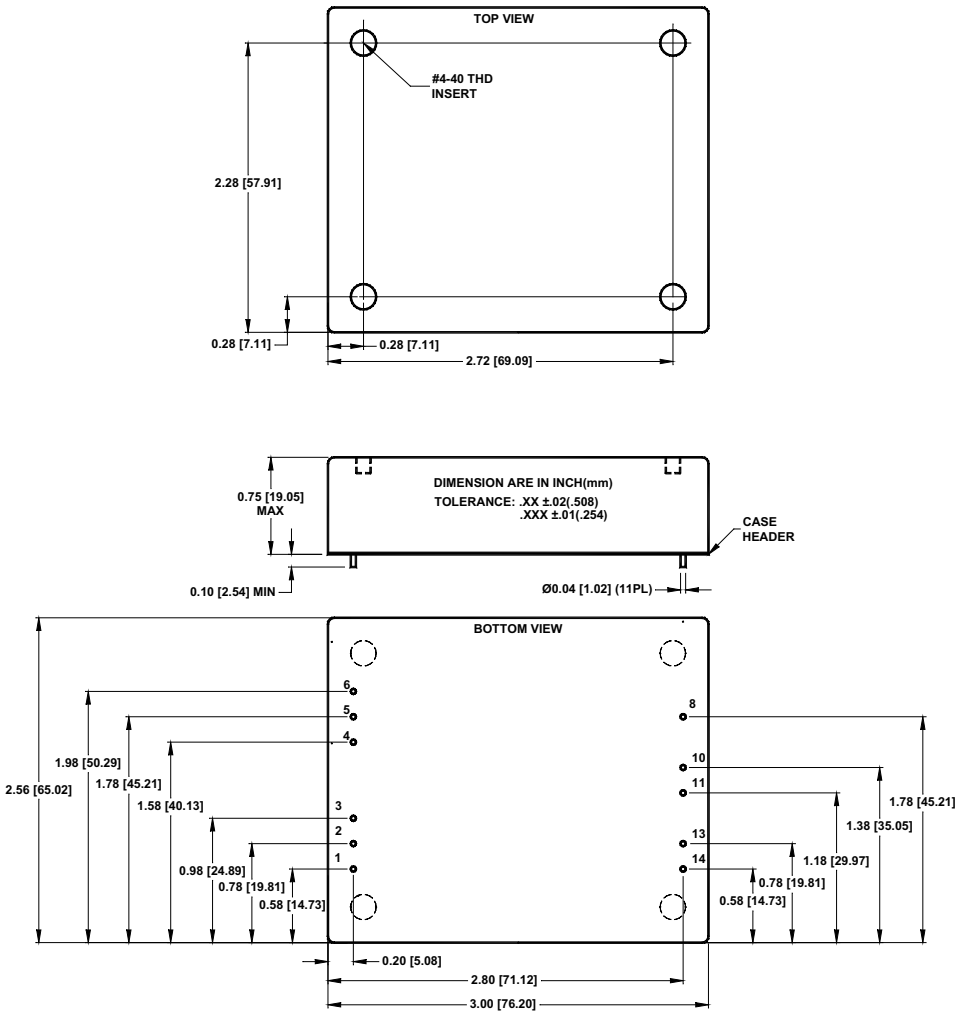

Pin	Function
	DUAL
1	ON/OFF
2	$+V_{IN}$
3	$+V_{IN}$
4	SYNC
5	$-V_{IN}$
6	$-V_{IN}$
8	$-V_{OUT}$
10	COM
11	COM
13	$+V_{OUT}$
14	V_{OUT} ADJ

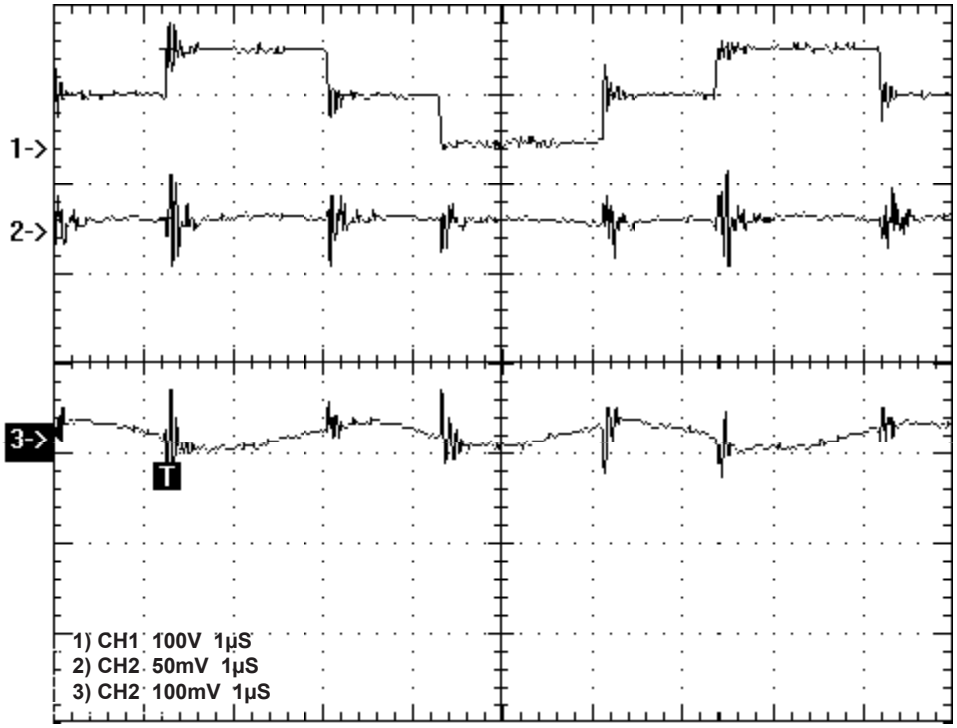

Reflected ripple with 100µF C_{IN}

V_{OUT} with 3.3µF ceramic capaci-

FIGURE 3. Reflected ripple and V_{OUT}

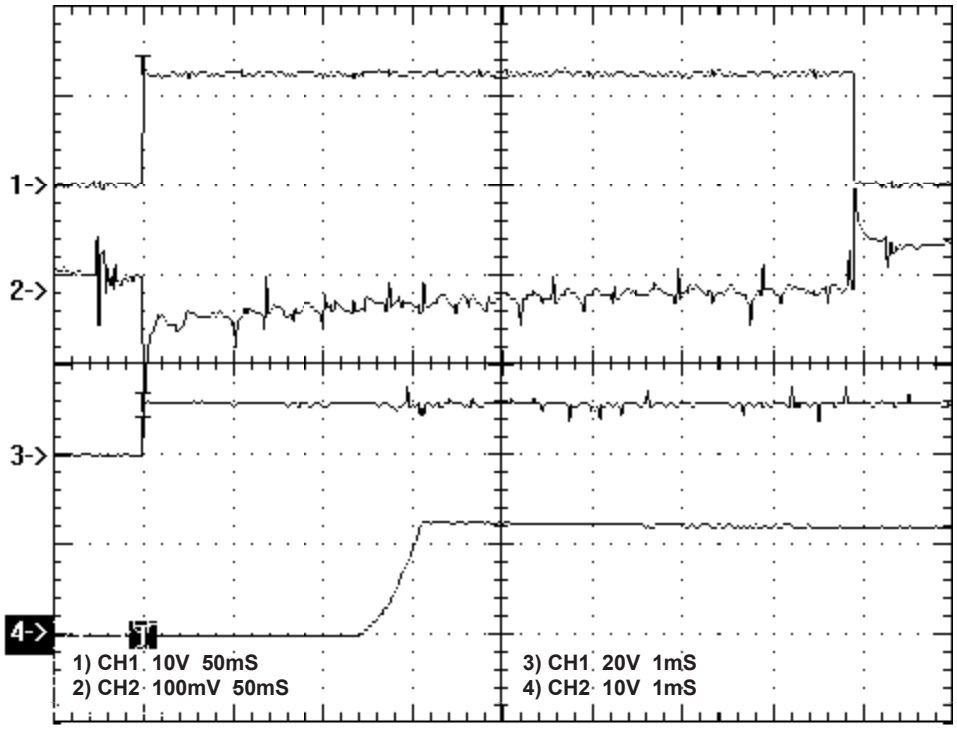

Transient response

Turn on delay (On/Off)

FIGURE 4. Transient response and turn on delay with soft start

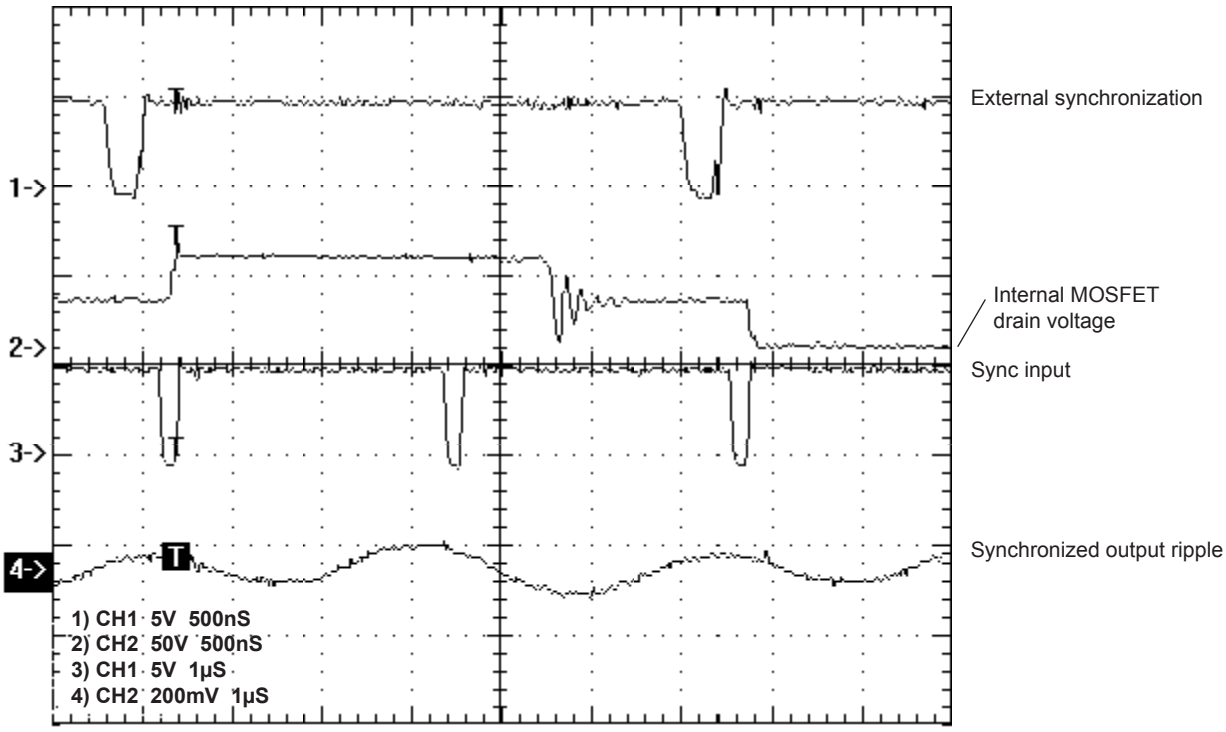

FIGURE 5. Synchronization waveforms