PRELIMINARY

150W DC/DC CONVERTER
BD200001H

+45V_{out}@3.3A, up to 200W peak power
18V-36V Input Range,1500Vdc Isolation

Key Features

- Efficiency up to 87%
- 1500Vdc input-to-output isolation
- 2:1 input voltage range
- Input undervoltage protection
- Output overvoltage protection
- Soft start
- Adjustable output
- 135kHz switching frequency
- Thermal protection
- Six-sided shielding

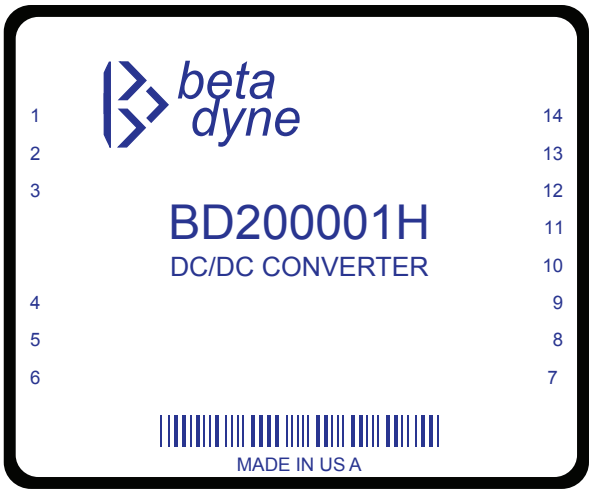

Beta Dyne is protected under various patents, including but not limited to U.S. Patent numbers: 5,777,519; 6,188,276; 6,262,901; 6,452,818; 6,473,3171.

Applications

Base Stations

Industrial

Functional Description

The BD200001H is a single output DC/DC converter that accepts an input voltage of 18 to 36V_{IN} with an output power of 150W(45V@3.30A). With heatsink, the converter is also designed to supply a peak power of 200W(45V@4.4A) for 1 minute. A high switching frequency of 135kHz, SMD design and thermal management improve efficiency and reliability.

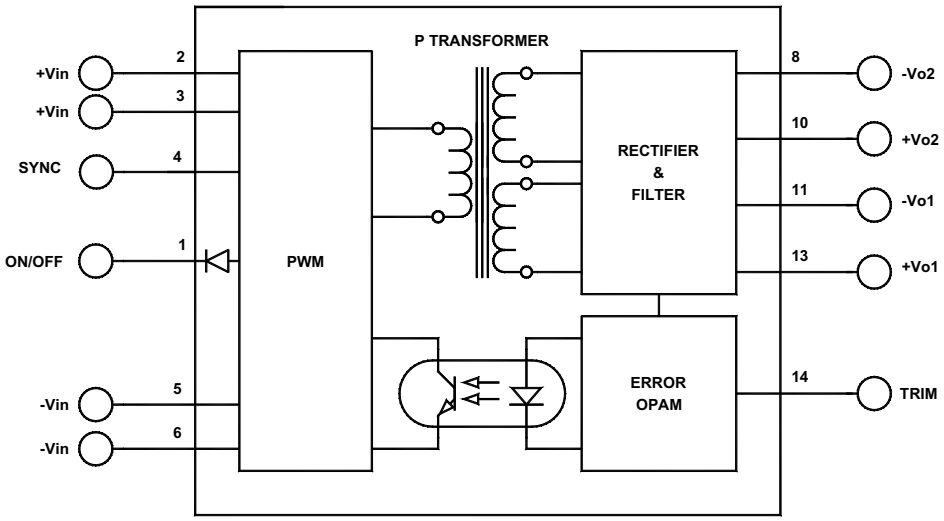

Typical Block Diagram

Electrical Specifications

Unless otherwise specified, all parameters are given under typical +25°C with nominal input voltage and under full output load conditions.

INPUT SPECIFICATIONS

PARAMETER	CONDITION / NOTE	MIN	TYP	MAX	UNIT
Input Voltage Range		18	24	36	Vdc
Input Startup Voltage		18			Vdc
Input Filter	C				
Reverse Polarity	External series-blocking diode				
Reflected Ripple	See Figure 5		100		mA_{PP}
No Load Input Current			100		mA
Full Load Input Current			7100		mA
Input Surge Current (20µS Spike)				10	A
Short Circuit Current Limit			150		% I_{IN}
Off State Current			0.3		mA
Remote ON/OFF Control					
Supply ON	Pin 1 Open (Open circuit voltage: 13V max.)				
Supply OFF		0		0.8	Vdc
Logic Input Reference	-Input for ON/OFF				
Logic Compatibility for Reference	TTL Open Collector or CMOS Open Drain				
Sync Input	TTL	2.5		5	Vdc
Sync Input Frequency Range		260	272	312	kHz
Sync Input Minimum Pulse Width	See Figure 7	200			nS

OUTPUT SPECIFICATIONS

PARAMETER	CONDITION / NOTE	MIN	TYP	MAX	UNIT
Output Voltage			45		Vdc
Output Voltage Accuracy			±1	±2	%
Output Current	45V@4.40A, for Maximum power for 1 minute only		3.30	4.40	A
Ripple & Noise	See Figure 2		1	2	$\%V_{PP}$ of V_{OUT}
Line Regulation			±0.5	±1	%
Load Regulation			±1	±2	%
Output Overvoltage Protection			120		% of V_{OUT}
Temperature Coefficient @ FL			0.02		%/°C
Transient Response Time (to within 1% of V)	50% FL to FL to 50% FL, See Figure 6		50	100	µS
Short Circuit Protection	By input current limiting				
Output Adjust Range	See Figure 8		±5		%

GENERAL SPECIFICATIONS

PARAMETER	CONDITION / NOTE	MIN	TYP	MAX	UNIT
Efficiency	V_{IN}=24V, V_{OUT}=45V@3.3A		87		%
Isolation Voltage (1 min.), Input to Output			1500		Vdc
Isolation Resistance			10^9		Ω
Isolation Capacitance			180		pF
Switching Frequency			136		kHz
Turn On Delay	See Figure 6		10		mS
Soft Start Time	See Figure 6		15		mS

* NOTES

[1] Adequate insulation is to be provided to the converters at the end usage as per applicable requirements.

[2] Temperature rise on the case of the converters is to be considered during the end usage as per applicable requirements.

[3] The maximum input current at any given input range measured at minimum input voltage is given as $1.6*I_{NOMINAL}$. Nominal input current is the typical value measured at the input of the converter under full-load room temperature and nominal input voltage (24Vdc).

[4] Measured with 100µF capacitor at the input power pins.

ENVIRONMENTAL SPECIFICATIONS

PARAMETER	CONDITION / NOTE	MIN	TYP	MAX	UNIT
Operating Temperature Range (Ambient)*		-40		+70	°C
Storage Temperature Range		-55		+125	°C
Thermal Resistance without Heat Sink	°C per watt internally dissipated, See Figure 3		1.57	=	$°C/W_{DISS}$
Heat Sink Thermal Resistance			5.6		$°C/W_{DISS}$
Thermal Resistance with Heat Sink			1.22		$°C/W_{DISS}$
Maximum Operating Case Temperature				110	°C
Cooling	Free air convection				
EMI/RFI	Six-sided continuous shielded metal case				
MTBF	per MIL-HNBK-217F (Ground benign, +25°C)		400,000		hours
Humidity	Up to 95% non-condensing				
Thermal Shutdown	Case Temperature		81		°C
Thermal Hysterisis			25	35	°C

* See footnotes 1 and 2.

PHYSICAL CHARACTERISTICS

PARAMETER	CONDITION / NOTE	MIN	TYP	MAX	UNIT
Dimensions (L×W×H)	3.00×2.56×0.75 in. (76.20×65.02×19.05mm)				
Weight	7.87 oz. (223g)				
Case Material	Black coated copper				
Shielding Connection, $24V_{IN}$	$-V_{IN}$ (Pins 5 & 6)				

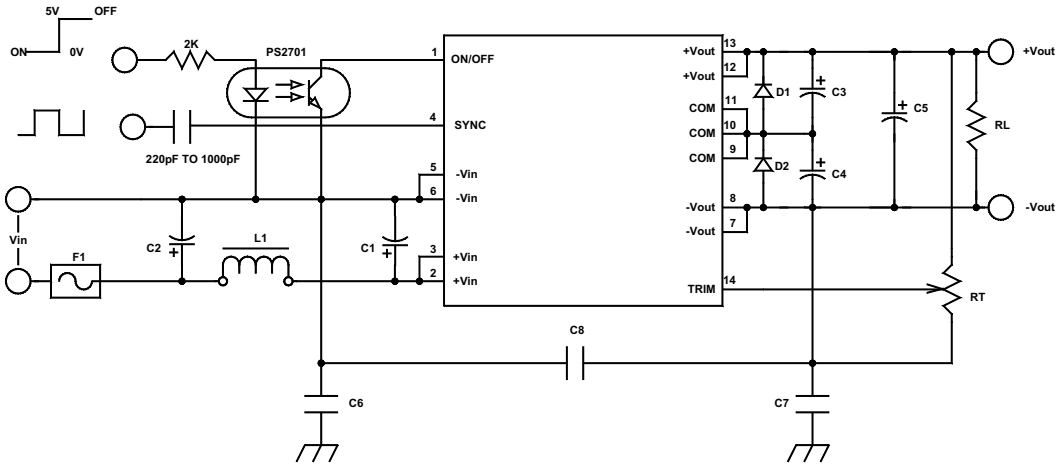

F1 = 15A Slow Blow Fuse
C1, C2 = 100uF@50V
L1 = 1uH@15A
D1,D2 = SK36B
C8 = 2200pF to .01uF@2000V
C6,C7 = 2200pF@100V

FIGURE 1. Typical connection diagram of BD200001H

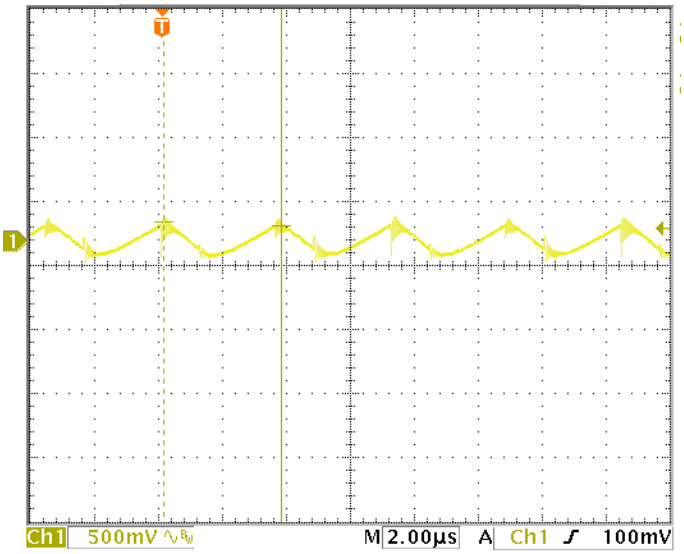

FIGURE 2. Output ripple of BD200001H

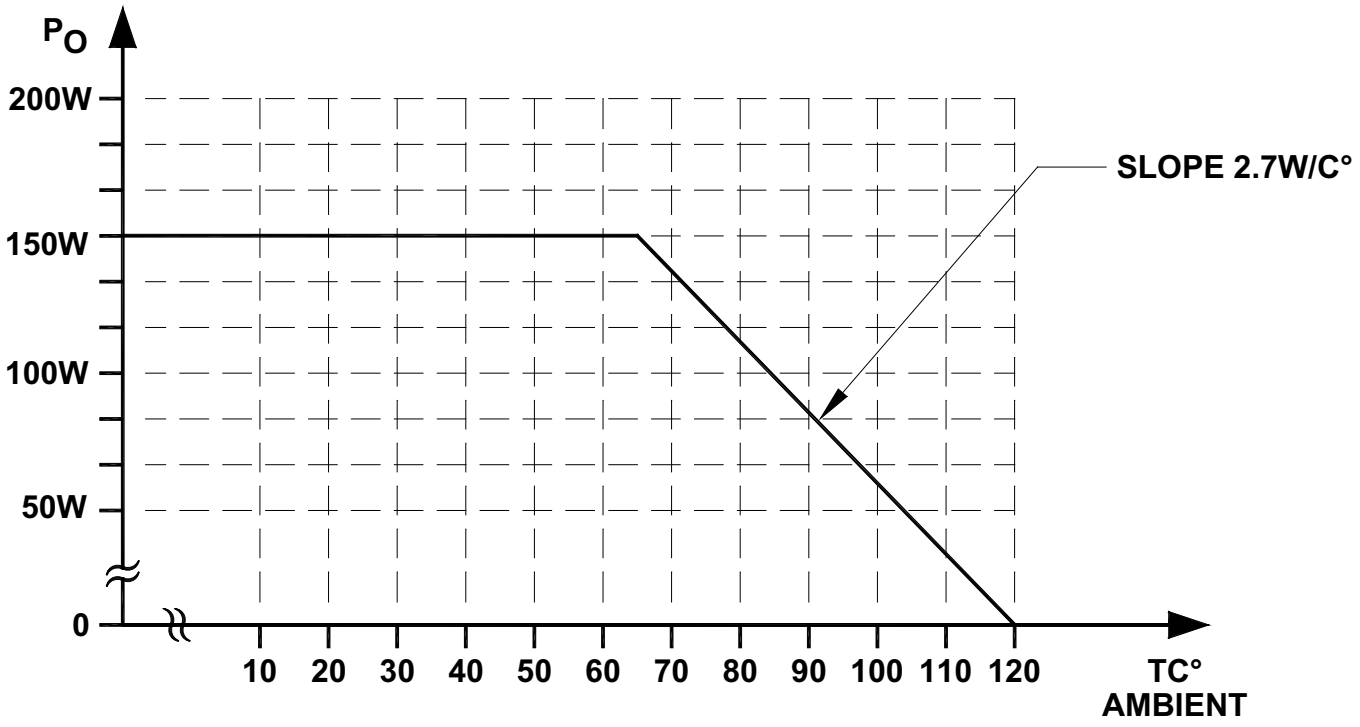

FIGURE 3. Derating Curve of BD200001H

EXTERNAL TRIMMING OF OUTPUT VOLTAGES

To trim the output voltage DOWN, connect a 5% ¼W resistor between the $+V_{O1}$ output and trim pin of the converter. To trim the output voltage UP, connect a 5% ¼W resistor between the $-V_{O1}$ output and trim pins of the converter. For UP/DOWN trimming capability, connect a 20kΩ potentiometer between the + and - output pins, with the wiper arm connected to the trim pin.

The trim resistors/potentiometer can be connected at the converter output pins or the load. However, if connected at the load, the resistance of the runs becomes part of the feedback network which improves load regulation. If the load is some distance from the converter, the use of #20 gauge wire is recommended to avoid excessive voltage drop due to the resistance of the circuit paths.

See our application notes:
DC-001: Testing Transient Response in DC/DC Converters
DC-004: Thermal Consideration for DC/DC Converters

MECHANICAL SPECIFICATIONS

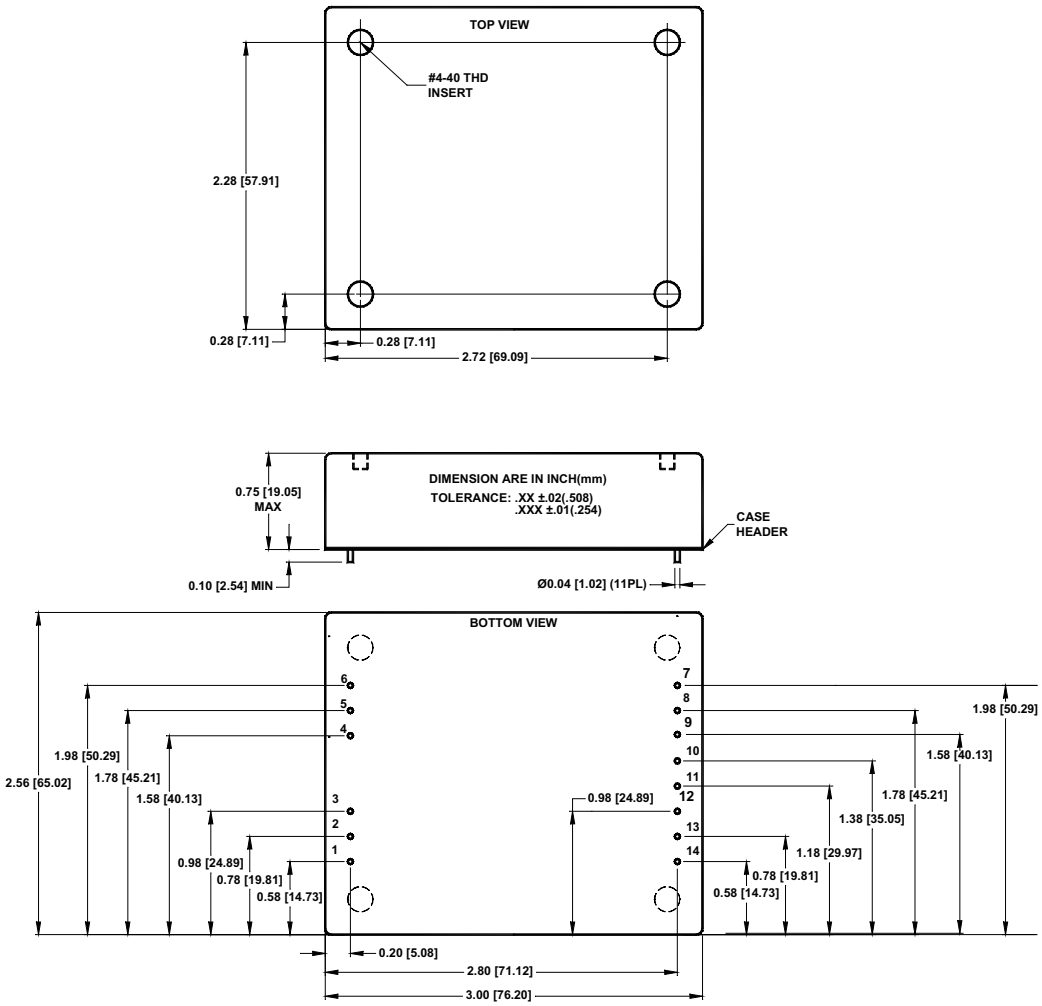

Pin	Function
	DUAL
1	ON/OFF
2	$+V_{IN}$
3	$+V_{IN}$
4	SYNC
5	$-V_{IN}$
6	$-V_{IN}$
7	$-V_{OUT}$
8	$-V_{OUT}$
9	COM
10	COM
11	COM
12	$+V_{OUT}$
13	$+V_{OUT}$
14	V_{OUT} ADJ

MECHANICAL SPECIFICATIONS for HEAT SINK

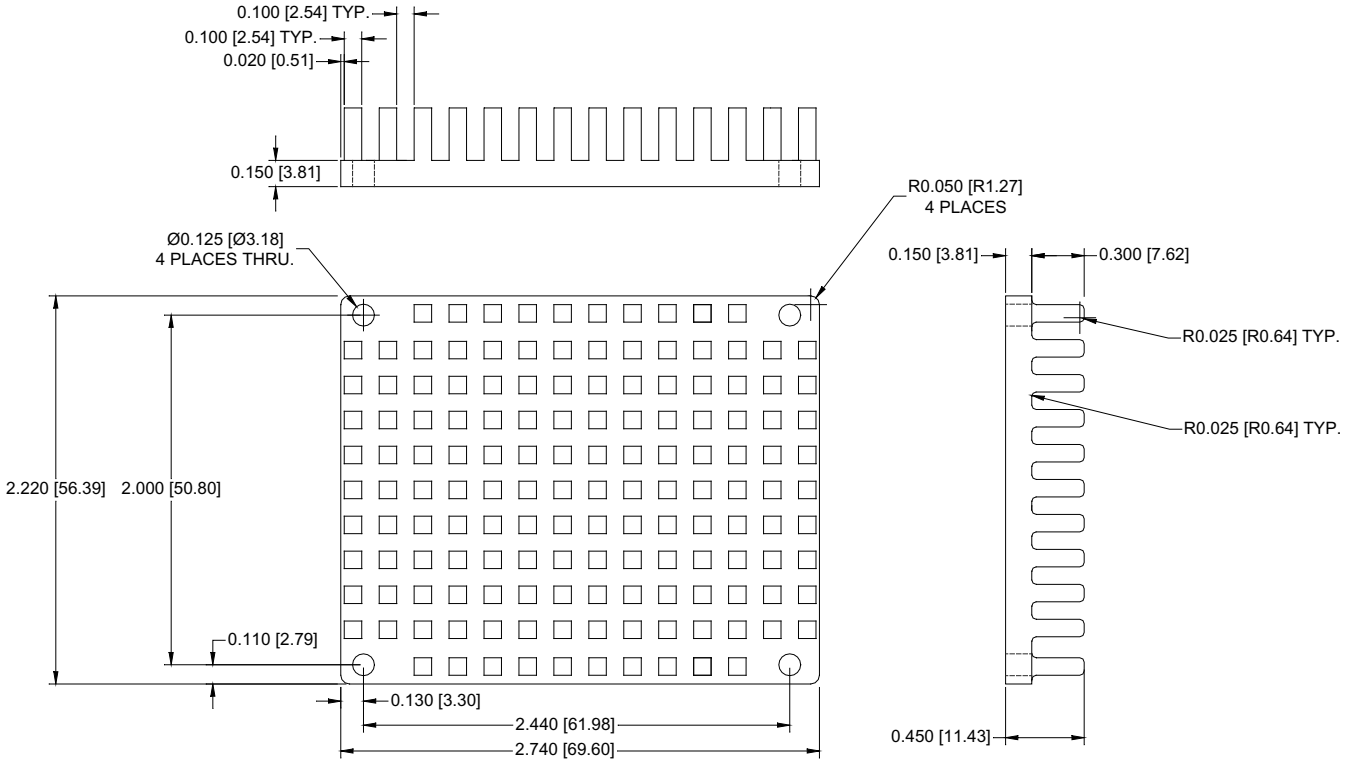

FIGURE 4. Heat Sink for the BD200001H DC-DC Converter

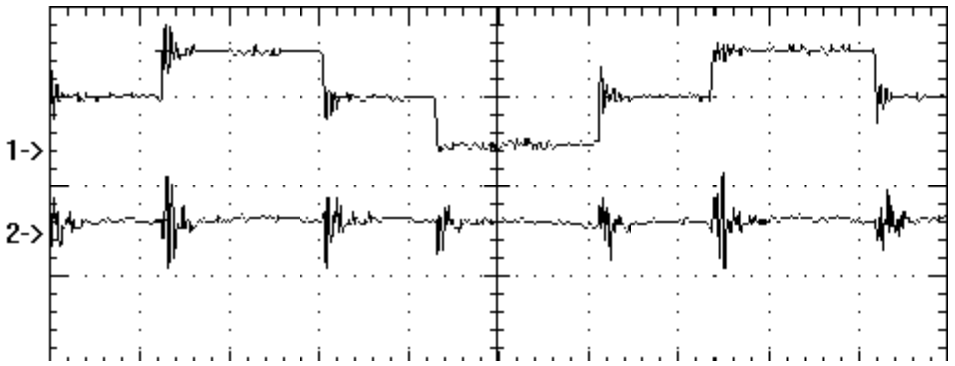

1) CH1 100V 1µS
2) CH2 50mV 1µS

FIGURE 5. Reflected input ripple

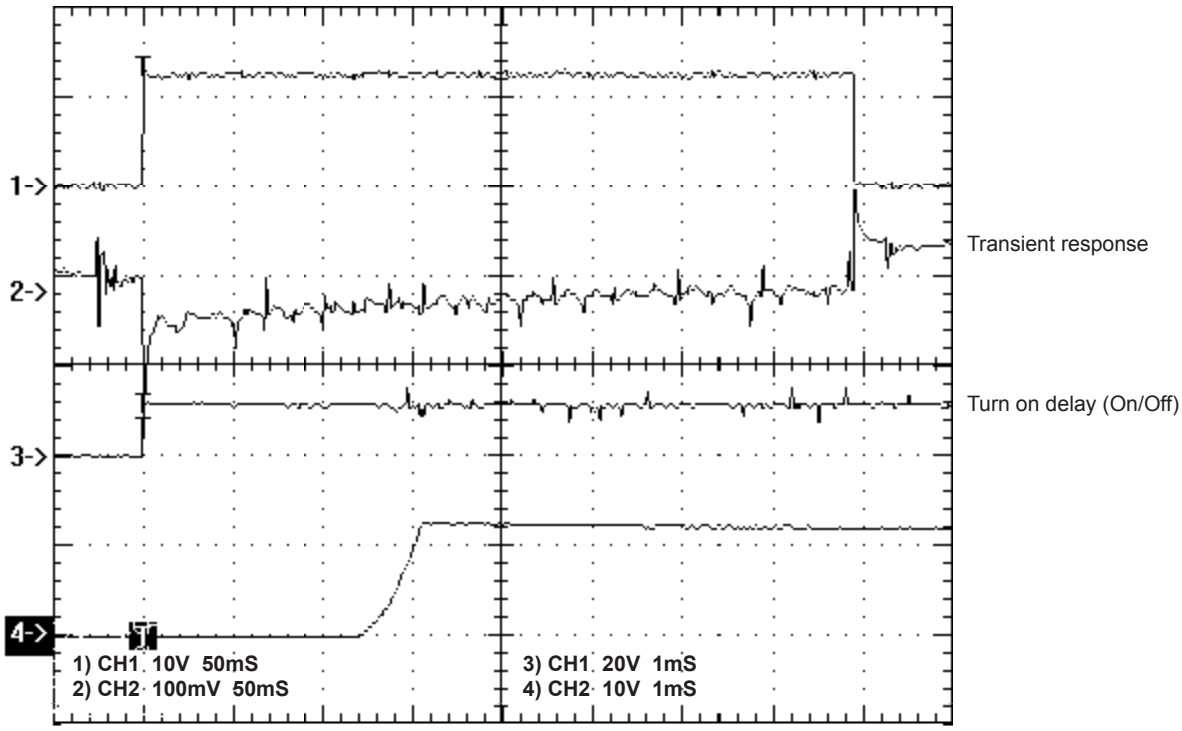

FIGURE 6. Transient response and turn on delay with soft start

EXTERNAL SYNCHRONIZATION

The converter can be synchronized to an external clock by driving the SYNC pin (pin 2) directly. The driving signal frequency must be 272kHz (3% to 4% low, 96% to 97% high duty cycle). When the external clock is AC-coupled to the SYNC pin of the converter through a ceramic capacitor, connect a signal Schotky diode with the cathode connected to the SYNC pin and the anode to $-V_{IN}$. AC coupling reduces the power required for driving multiple converters and allows for continuous operation of the other synchronized converters in case the driving signal is missing or a short circuit develops at one of the sync inputs.

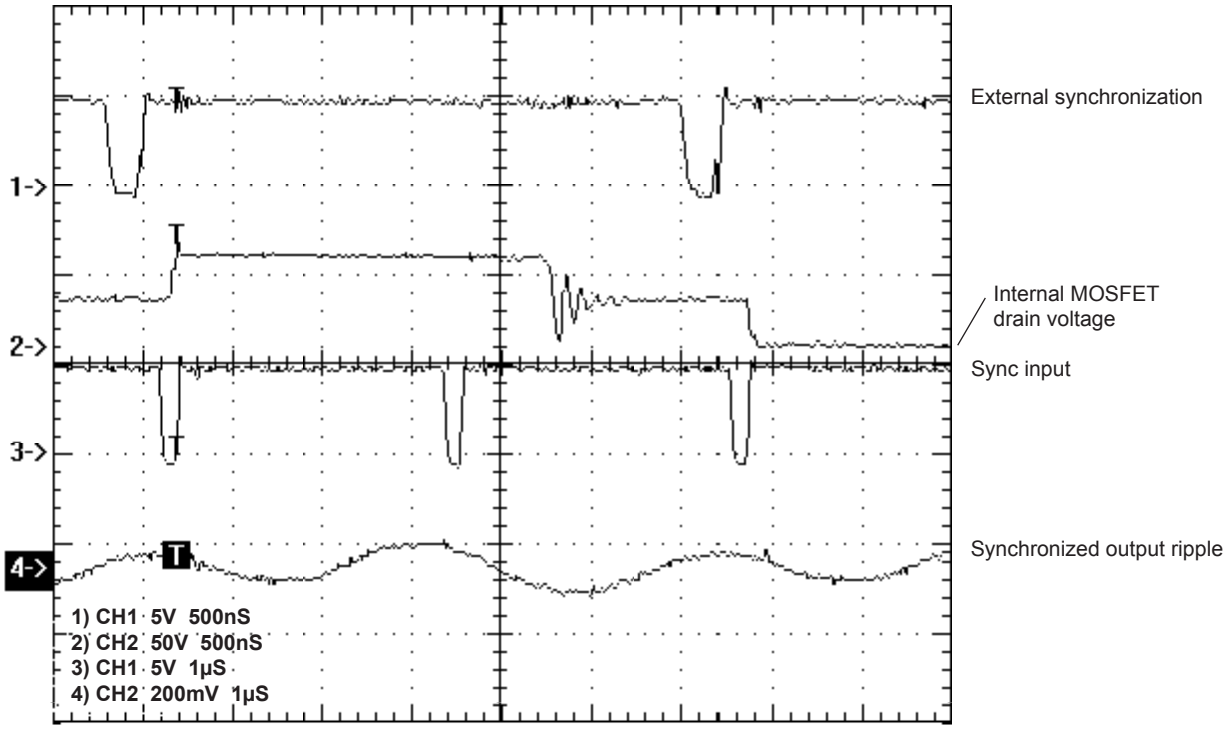

FIGURE 7. Synchronization waveforms

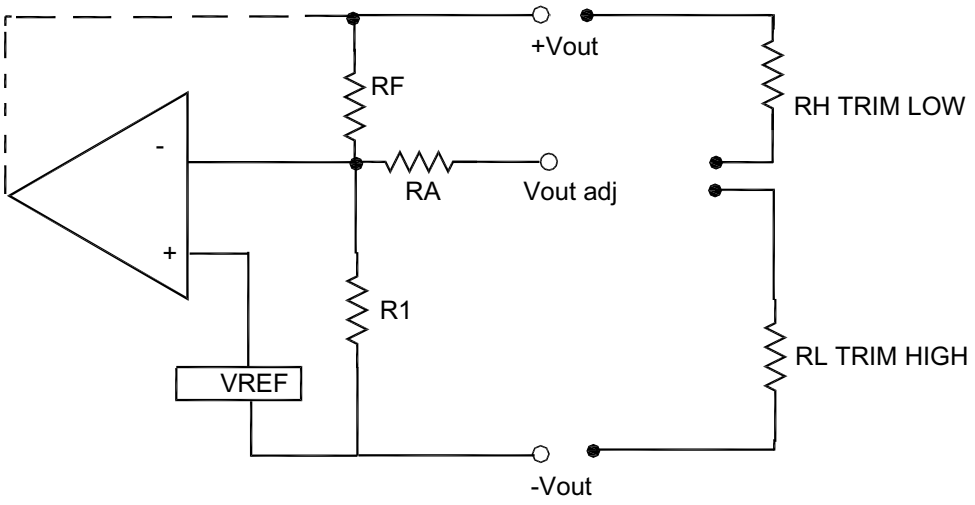

Vout(V)	R1(KOhms)	RF(KOhms)	RA(KOhms)	VREF(V)
(+/-22.5)45	4.42	75	30.1	2.50

FIGURE 8. Output voltage trim table for BD200001H

To calculate RH adjust for higher Vout use

RH= {[R1*RF*Vref]/[(R1*Vout)-Vref(R1+RF)]} - RA

To calculate RL for lower Vout use

RL= {[R1*RF(Vout-Vref)]/[Vref(RF+R1)-R1Vout]} - RA

Where Vout is the new desired ouput voltage.

Output voltage trim equations for BD200001H