BD65000

65W Max High-Voltage, Triple Output DC/DC Converter

12–48V_{IN}, 10–100V_{OUT}

Key Features

- 3 independent isolated outputs
- 2:1 input voltage range (3:1 & 4:1 available)
- Input-to-output isolation
- Output-to-output isolation
- Soft start
- Input LC filter
- Short circuit
- EMI six-sided shielding

Functional Description

The BD65000 is a 65W Max High-Voltage, Triple Output DC/DC Converter in a 3.00×2.50×0.75-inch package that offers customer-definable input voltages of 12, 24 and 48 V_{IN} and output voltages from 10V_{OUT} to 100V_{OUT}. The output can share the power equally or operate with unbalanced loads as long as the maximum output power is less than or equal to 65 watts. All outputs are isolated from the input and each other. The main output provides ±1% typical line and load regulation, while the two auxiliaries provide ±5%.

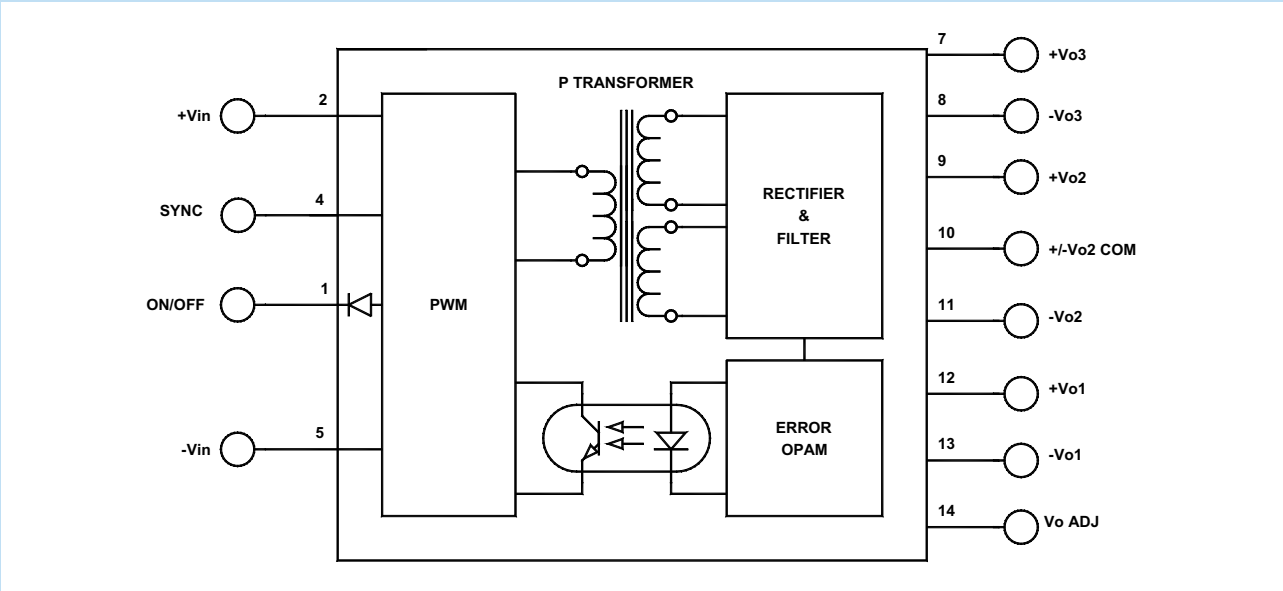

Typical Block Diagram

Electrical Specifications

Unless otherwise specified, all parameters are given under typical +25°C with nominal input voltage and under full output load conditions.

INPUT SPECIFICATIONS

PARAMETER	CONDITION / NOTE	MIN	TYP	MAX	UNIT
Input Voltage Range		12	24	48	Vdc
Input Voltage Slew Rate				10	V/µS
No Load Input Current	@12Vdc		40		mA
Full Load Input Current	@12Vdc		250		mA
Input Filter	LC				
Reflected Ripple Current	Measured with 100µF input capacitor, See Figure 1		100		mA_{PP}
Reverse Voltage Protection	Parallel Diode		5		A
On/Off	Reference to $-V_{IN}$				
Voltage	Open		10		Vdc
Turn On Delay	Including soft start, See Figure 2		200	250	mS
Startup Input Voltage		11			Vdc

OUTPUT SPECIFICATIONS

PARAMETER	CONDITION / NOTE	MIN	TYP	MAX	UNIT
Output Voltage		10		100	Vdc
Output Voltage Accuracy			1		%
Output Current		0.17		1.3	A
Ripple & Noise (20MHz BW)			1	4	% of V_{OUTPP}
Line Regulation	Outputs fully loaded		1		%
Load Regulation	10% FL to FL		1		%
Output Voltage		±10		±200	Vdc
Output Voltage Accuracy			5	10	%
Output Current		0.17		1.3	A
Ripple & Noise (20MHz BW)			2	4	% of V_{OUTPP}
Line Regulation	Outputs fully loaded		5		%
Load Regulation	10% FL to FL, Main fully loaded		5		%
Output Voltage		10		200	Vdc
Output Voltage Accuracy			5	10	%
Output Current		0.17		1.3	A
Ripple & Noise (20MHz BW)			2	5	% of V_{OUTPP}
Line Regulation	Outputs fully loaded		5	10	%
Load Regulation	10% FL to FL, Main fully loaded		5	10	%
Temperature Coefficient @ FL			±0.02		%/°C
Short Circuit Protection	Continuous, Current Limit				
Short Circuit Restart	Automatic				
Transient Response (to within 1% of V), MAIN	50% FL to 100% FL to 50% FL, See Figure 2		250		µS

GENERAL SPECIFICATIONS

PARAMETER	CONDITION / NOTE	MIN	TYP	MAX	UNIT
Efficiency			68		%
Isolation Voltage (1 min.)		500	1000		Vdc
Isolation Resistance			10^9		Ω
Isolation Capacitance			300		pF
Switching Frequency			125	130	kHz

ENVIRONMENTAL SPECIFICATIONS

PARAMETER	CONDITION / NOTE	MIN	TYP	MAX	UNIT
Operating Temperature Range (Ambient)		-25		+60	°C
Storage Temperature Range		-60		+125	°C
Derating	See Figure 7				
Thermal Protection, Turn Off[1]	Junction Temperature		145		°C
Thermal Hysterisis			30		°C
Humidity	Up to 95% non-condensing				
Cooling	Free-air convection				
MTBF	per MIL-HNBK-217F (Ground benign, +25°C)		300,000		hours

PHYSICAL CHARACTERISTICS

PARAMETER	CONDITION / NOTE	MIN	TYP	MAX	UNIT
Dimensions (L×W×H)	3.00×2.50×0.75 in. (76.20×63.50×19.05mm)				
Weight	7.6 oz. (215g)				
Case Material	Coated copper				
Shielding	Six-sided continuous				
Case Connection, 12 & 24V	IN				
Case Connection, 48V	IN				

[1] The input power may have to be recycled after thermal turn off.
[2] Maximum output current is given for minimum output voltage and minimum output current is given for maximum output voltage.

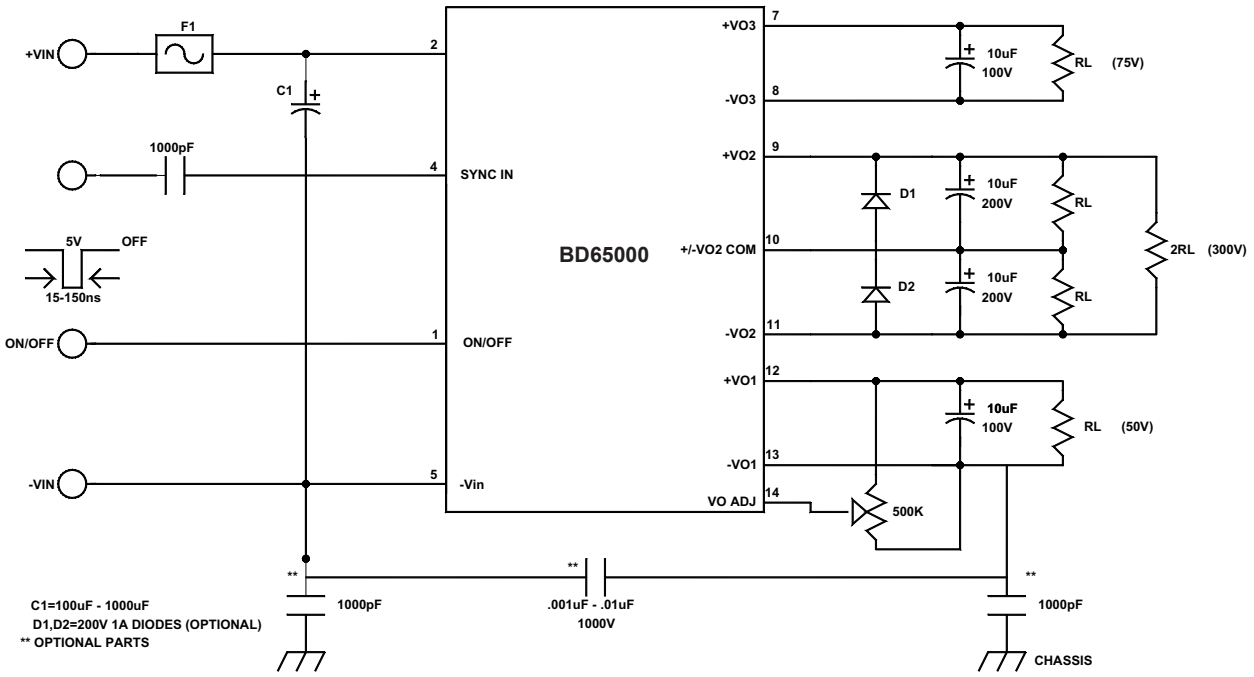

FIGURE 1. Connection diagram

MECHANICAL SPECIFICATIONS

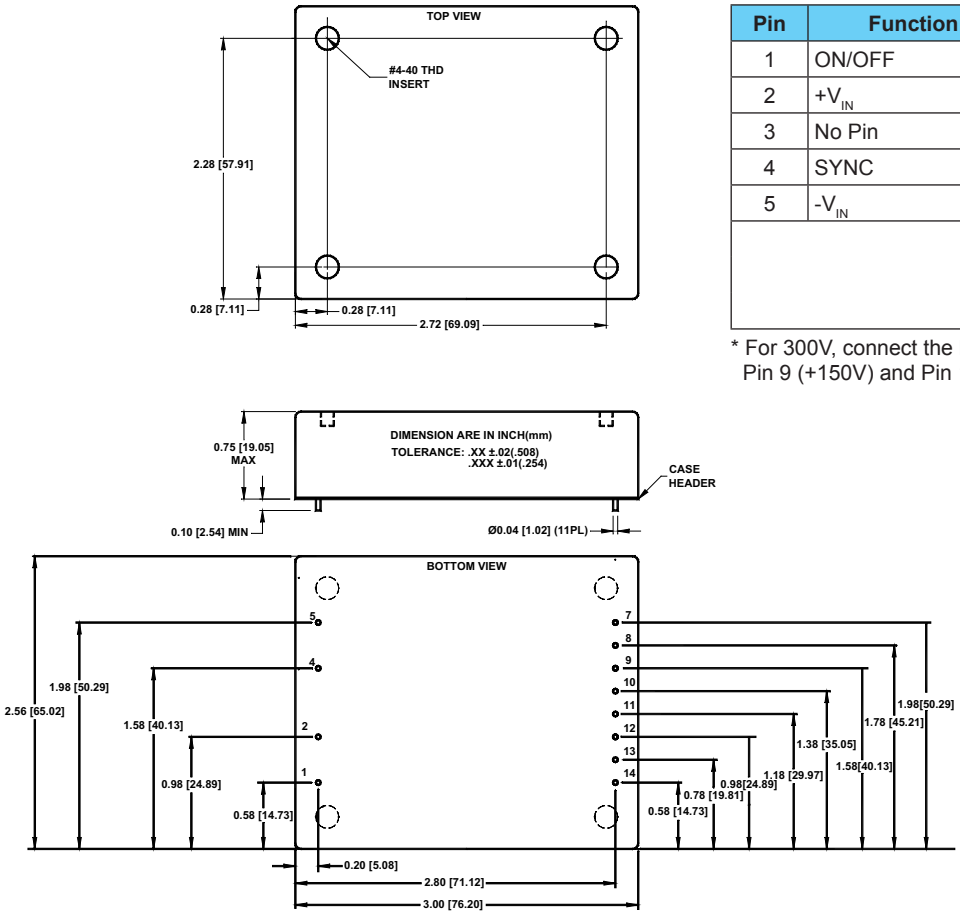

Pin	Function	Pin	Function
1	ON/OFF	7	$+V_{O3}$ (+75V)
2	$+V_{IN}$	8	$-V_{O3}$ (-75V)
3	No Pin	9	$+V_{O2}$ (+150V) *
4	SYNC	10	$\pm V_{O2}$, COM (±150V)
5	$-V_{IN}$	11	$-V_{O2}$ (-150V) *
		12	$+V_{O1}$ (+50V)
		13	$-V_{O1}$ (-50V)
		14	V_{OUT} ADJ

* For 300V, connect the load between Pin 9 (+150V) and Pin 11 (-150V)

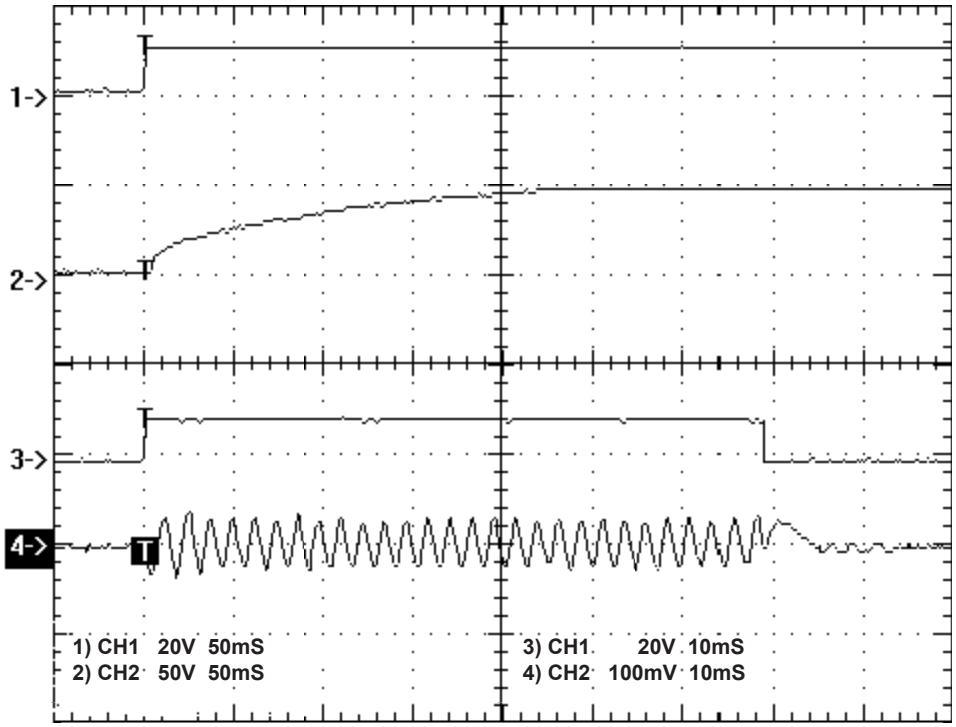

Turn on delay with soft start

Transient response & output ripple

FIGURE 2. Turn on delay and transient response