PRELIMINARY

SRLV50

Step-Up Switching Regulator

$0.8V_{IN}$ to $2V_{IN}$
Up to 60W at Maximum V_{IN}

Key Features

- 78% efficiency
- Wide input range ($0.8–2V_{IN}$)
- Output overvoltage protection
- 57kHz constant frequency
- Six-sided shielding
- Thermal protection

Functional Description

The SRLV50 is a low input voltage, step-up switching regulator that accepts $0.8V_{IN}$ to $2V_{IN}$ and produces $12V_{OUT}$@3A (with an input voltage of $1.5V_{IN}$). The converter utilizes planar magnetics and very low ESR capacitors to minimize power dissipation. Other features include output over-voltage protection (OVP), thermal protection, six-sided shielding and optional synchronization.

NOTE: This converter DOES NOT feature short circuit protection, you must use an external fuse to provide short circuit protection.

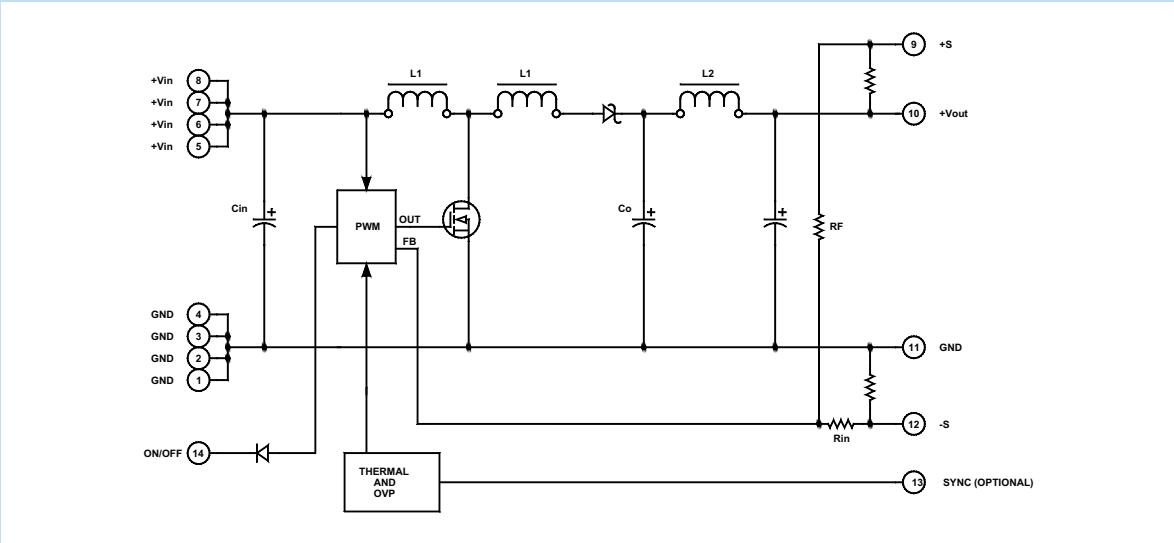

Typical Block Diagram

Electrical Specifications

Unless otherwise specified, all parameters are given under typical +25°C with nominal input voltage and under full output load conditions.

INPUT SPECIFICATIONS

PARAMETER	CONDITION / NOTE	MIN	TYP	MAX	UNIT
Input Voltage Range		0.8		2	Vdc
No Load Input Current	V = 1.5V		900		mA
Full Load Input Current	V = 1.5V, I = 3A, See Figure 5		30.77		A
Turn On Delay	See Figure 1		10		mS
Soft Start Time			100		mS
Off State Current	V = 1.5V		5		mA
Converter On	Open (Open circuit voltage at pin 14 = 12V)				
Converter Off		-0.6	0	0.2	Vdc
Logic Input Reference	-V				
Logic Compatibility	TTL open collector or CMOS open drain				
Turn On Voltage			0.85		Vdc

OUTPUT SPECIFICATIONS

PARAMETER	CONDITION / NOTE	MIN	TYP	MAX	UNIT
Output Voltage			12		Vdc
Output Voltage Accuracy			1	2	%
Output Current			4.2		A
Line Regulation			±1	±2	% of V_{OUT}
Load Regulation			±1	±2	% of V_{OUT}
Ripple and Noise			1	2	$_{OUTPP}$
Temperature Coefficient			0.01	0.02	%
Transient Response (to within 1% of V)	See Figure 2		250		µS
Short Circuit Current	Input Fuse				

GENERAL SPECIFICATIONS

PARAMETER	CONDITION / NOTE	MIN	TYP	MAX	UNIT
Efficiency	V_{IN} = 1.5V, I_O = 3A, See Figure 4		78		%
Switching Frequency	Fixed		57		kHz
Isolation	None				
Thermal Resistance			*TBD*		°C/W
Thermal Hysterisis			5		°C
Thermal Turn Off Temperature[1]	Case Temperature	80	85	90	°C
MTBF	per MIL-HNBK-217F (Ground benign, +25°C)		945,000		hours

[1] After thermal turn off, $V_{OUT} \cong V_{IN} - 0.7V$.

ENVIRONMENTAL SPECIFICATIONS

PARAMETER	CONDITION / NOTE	MIN	TYP	MAX	UNIT
Humidity	Non-condensing			95	%
Storage Temperature		-55		+125	°C
Operating Temperature, Commercial		-25		70	°C

PHYSICAL CHARACTERISTICS

PARAMETER	CONDITION / NOTE	MIN	TYP	MAX	UNIT
Dimensions (L×W×H)	3.00×2.56×0.75 in. (76.20×65.02×19.05mm)				
Weight	8.3 oz. (235g)				
Shielding Connection	-V				

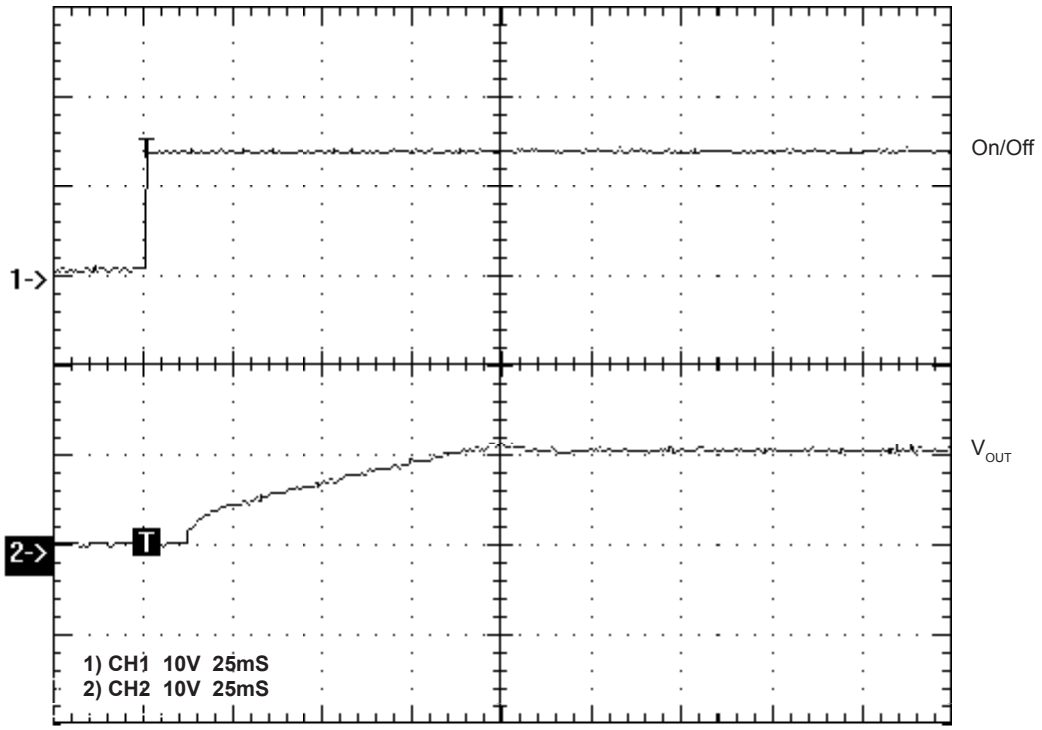

FIGURE 1. Turn on delay, V_{IN}=1.5V, I_O=2A

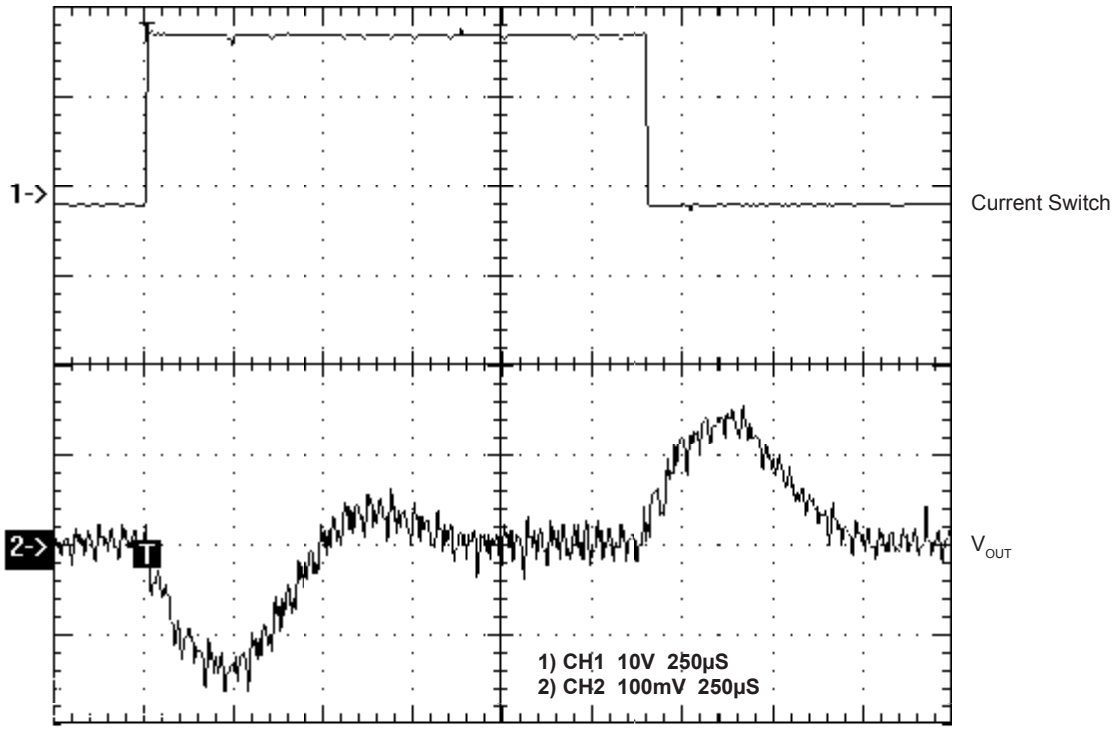

FIGURE 2. Transient response, V_{IN}=1.5V, I_O=1A to 2A to 1A

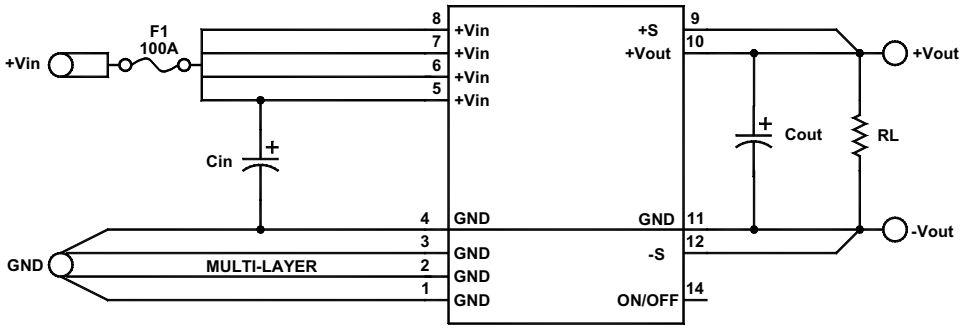

C_{IN} = 1000µF to 4700µF Low ESR
C_{OUT} = 1000µF to 2200µF Low ESR
United Chemi-Con PXA Series or equivalent

FIGURE 3. Typical connection diagram

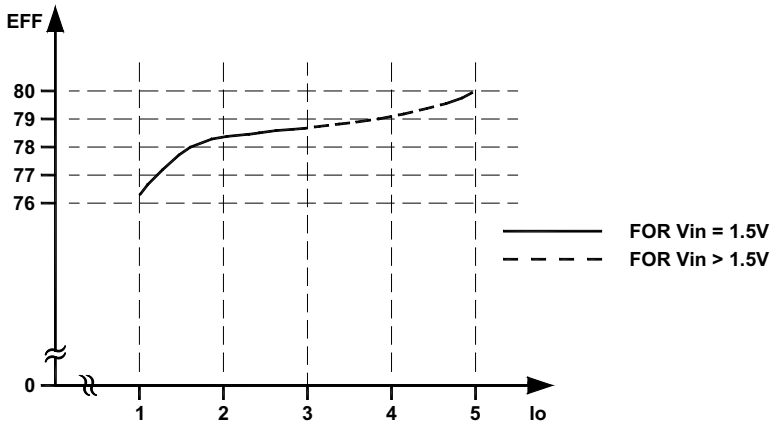

FIGURE 4. Efficiency vs. I_O

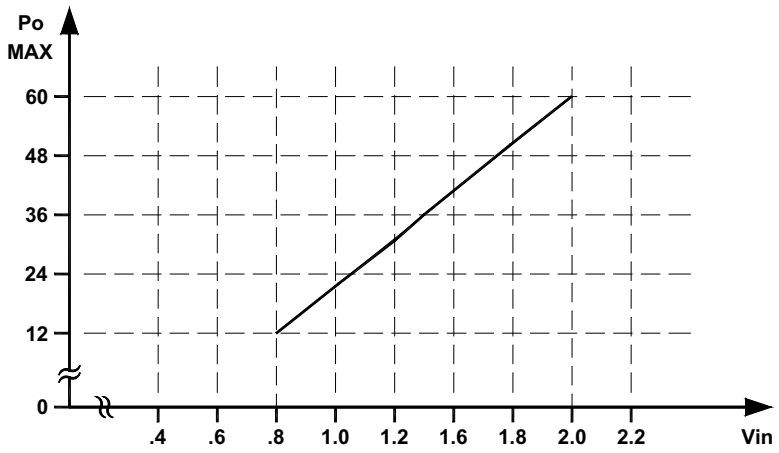

FIGURE 5. Maximum output power vs. V_{IN}

MECHANICAL SPECIFICATIONS

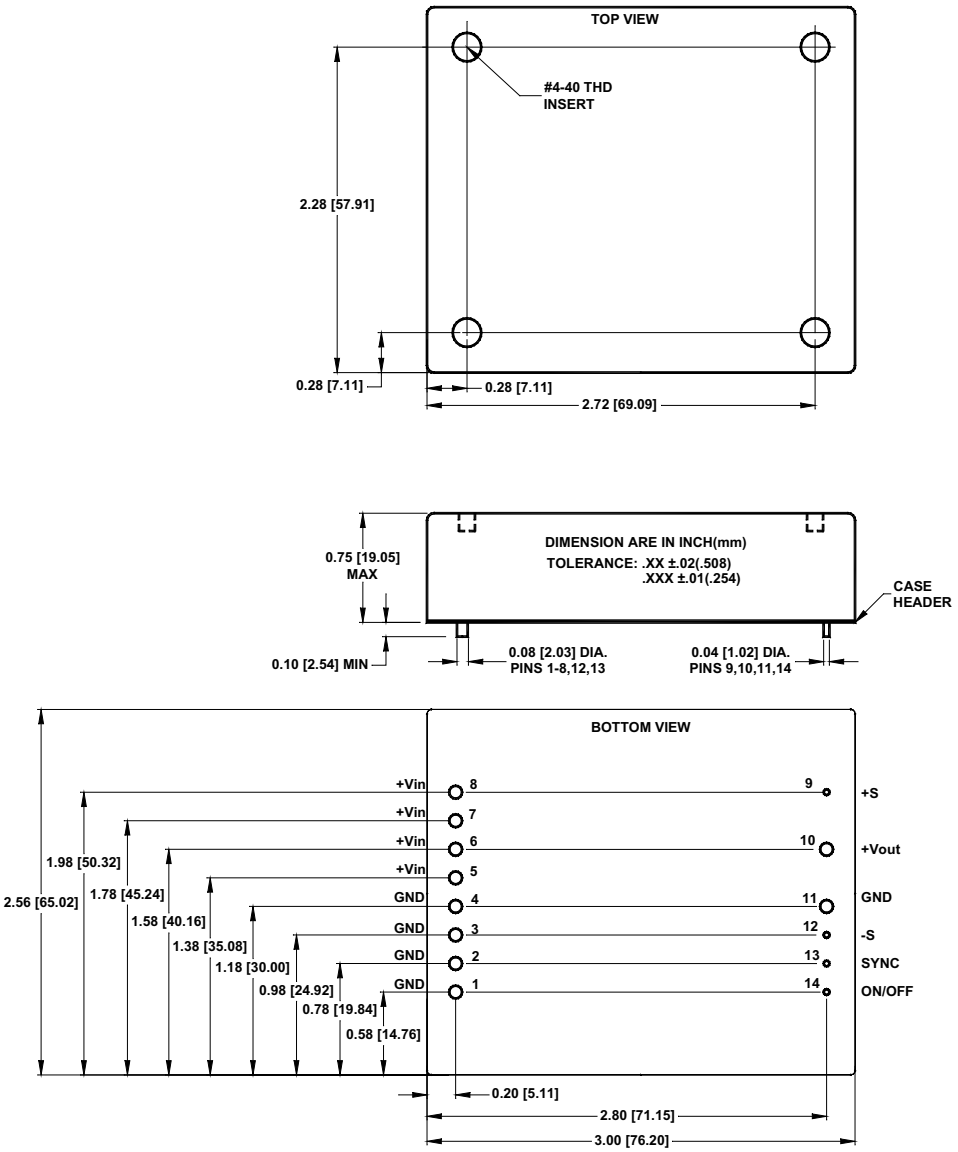

Pin	Function
1	GND
2	GND
3	GND
4	GND
5	$+V_{IN}$
6	$+V_{IN}$
7	$+V_{IN}$
8	$+V_{IN}$
9	+S
10	$+V_{OUT}$
11	GND
12	-S
13	SYNC
14	ON/OFF

APPLICATION INSTRUCTIONS

The switching regulator is a low input voltage, step-up switching regulator optimized to provide maximum efficiency at $1.5V_{IN}$ with a switching frequency of 57kHz. Due to the very low input impedance, the converter must be supplied from a very low output impedance voltage source.

The inductor impedance is 0.107Ω at 57kHz, the switching MOSFET RDS_{ON} is 0.5MΩ, and the input capacitor impedance inside the converter is 0.06Ω. Therefore, a low resistance power connection for the $+V_{IN}$ and $-V_{IN}$ from the source to the converter is required and very low ESR capacitors must be installed at the input pin of the converter.

If the power source has an output voltage sense pin, it must be connected to the input pin of the converter (see Figure 6). Even though the converter has a soft start feature to allow for slow turn on, the converter may not be able to start up if the power source has much higher impedance compared to that of the converter under full load. Because the input voltage drops, the input current increases (negative resistance condition) above the saturation point of the input inductor.

When the input inductor is saturated, the converter's input impedance is the same as the RDS_{ON} of the MOSFET. To avoid saturation at turn on, the setup shown in Figure 6 for the output can be used. The RC time constant connected at the gate of the MOSFET IRF7822 can be adjusted to allow the load to connect slowly at the converter's output.

NOTE: MOSFET IRF7822 has RDS_{ON} of 0.005Ω and V_{DS} of 30V. Any other MOSFET can be used depending on the maximum allowable power dissipation and load regulation.

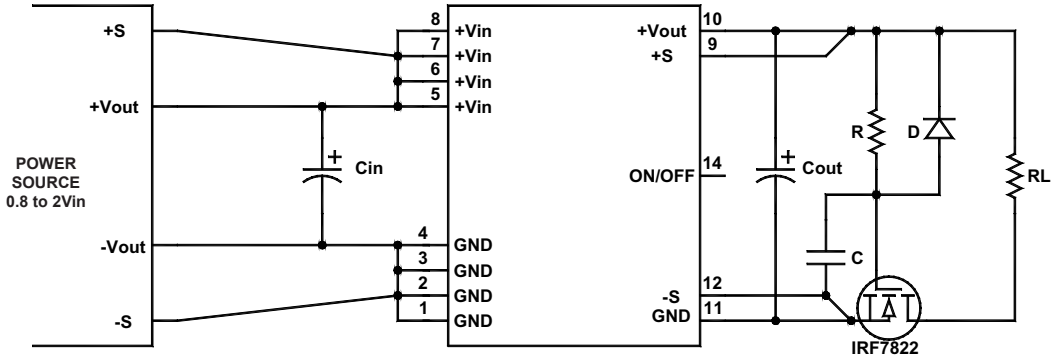

FIGURE 6. Power source connection and soft connecting load